# Appendix 2. Explosive view of product and parts

## AGR-10B(NG/LG)

**The use of parts provided by other companies, our company has the right not to provide warranty service;**
**Order replacement parts from authorized representatives and after-sale service agency.**
**Provide the model number, serial number and description when you order components.**

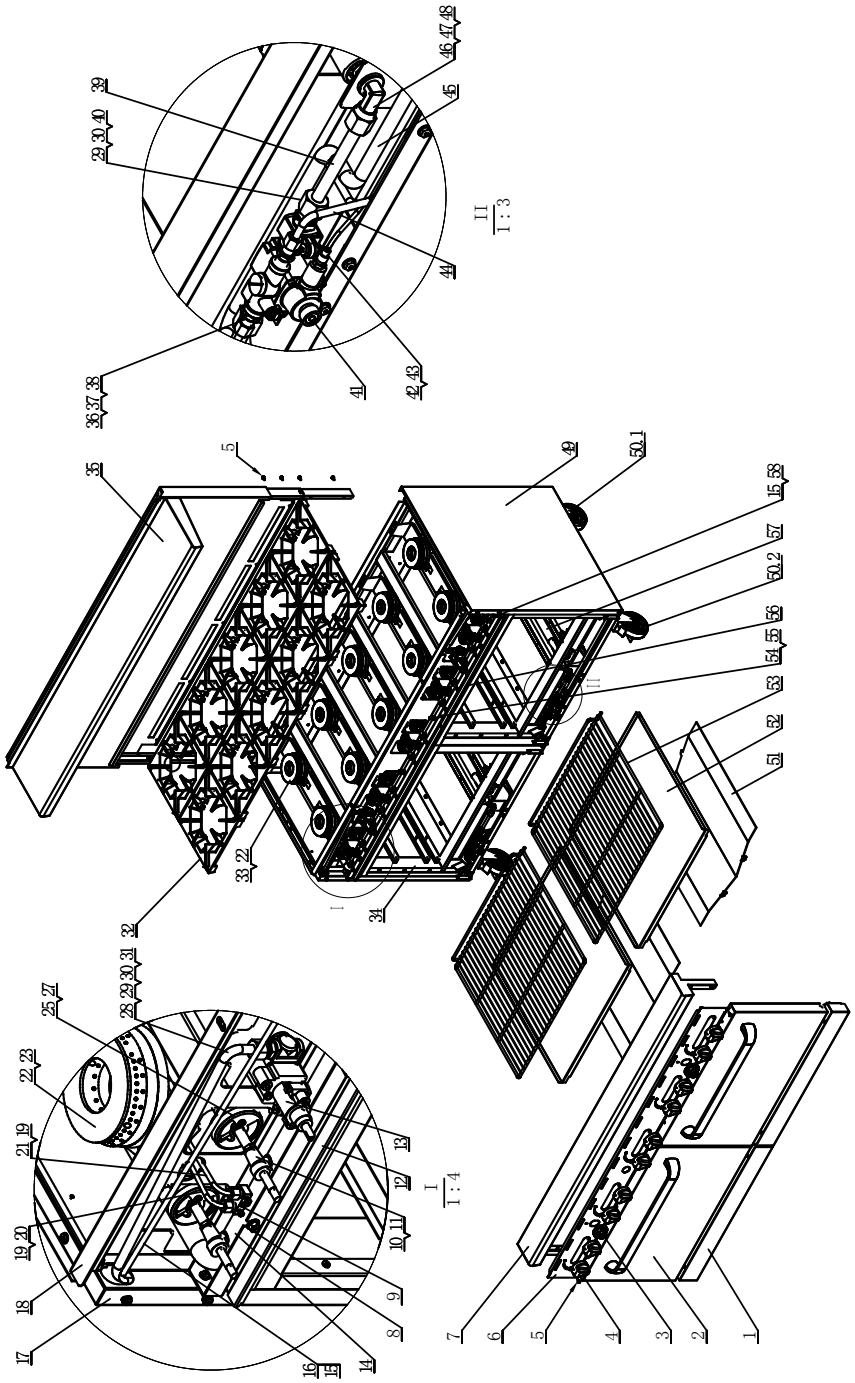

| No. | Matters Code | Component name | Qty | Dimensions (mm)/Model | Notes |
|---|---|---|---|---|---|
| 1 | 21107001064 | Underside face plate of oven | 2 | 755*88*51 | |
| 2 | 21207001010 | Oven door assembly | 2 | 755*460*52 | |
| 3 | 301140008 | Oven thermostat valve knob | 2 | | |
| 4 | 301140001 | Kirsite knob | 10 | | |
| 5 | 301081037 | Galvanized hexagon head flange face self-tapping screw | 44 | ST4.8*12.5 | |
| 6 | 21107002068 | Control panel | 1 | 1520*131 | |
| 7 | 21207001006 | Table-board front board assembly | 1 | 1524*125*189 | |
| 8 | 301080002 | Galvanized flange nut | 4 | M6 | |
| 9 | 301030007 | Pilot light valve-double unit | 5 | AP6-1 | |
| 10 | 301040153 | Gas restaurant ranges nozzle(NG) | 10 | NG38 Φ2.57 | |
| | 301040154 | Gas restaurant ranges nozzle(LP) | | LP51 Φ1.70 | |
| 11 | 301030002 | Stopcock | 10 | A18-318 | |
| 12 | 21107001067 | Catch tray of gas restaurant ranges | 1 | 855*625 | |
| 13 | 301030038 | Oven thermostat valve | 2 | BJWA-25PD0548 | |
| 14 | 301070032 | AGR-10B(NG/LG) input pipe | 1 | | |
| 15 | 301030037 | Normally open fire valve (single) | 2 | AP5-2 | |
| 16 | 301050037 | Pilot fire input fire of oven (left) | 1 | | |
| 17 | 21107001060 | Side block panel (left) | 1 | 698*752 | |
| 18 | 21207002004 | Upper stove body assembly | 1 | 1520*710*200 | |
| 19 | 301060003 | Pilot light head | 10 | | |
| 20 | 21107001084 | Pilot light intake pipe of gas restaurant ranges (short) | 5 | Φ4.7 L=266 | |
| 21 | 21107001085 | Pilot light intake pipe of gas restaurant ranges (long) | 5 | Φ4.7 L=562 | |
| 22 | 301020040 | Burner lid | 10 | | |

| | | | | | |
|---|---|---|---|---|---|
| 23 | 301020041 | Short ejector | 5 | | |
| 25 | 301990001 | Air door cover of gas restaurant ranges | 10 | | |
| 27 | 301081002 | Stainless steel cross pan head screw | 10 | M4*8 | |
| 28 | 301050045 | Main fire intake pipe of stove (left) | 1 | | |
| 29 | 301080007 | Copper nut | 8 | M16 | |
| 30 | 301050012 | Copper hoop | 8 | Φ10 | |
| 31 | 301060051 | Copper connector | 2 | 1/4" to M16 | |
| 32 | 301020016 | Octangular cooking grates | 10 | | |
| 33 | 301020042 | Long ejector | 5 | | |
| 34 | 21207001001 | Lower stove body assembly | 1 | 1520*696*572 | |
| 35 | 21207001007 | Back guard assembly | 1 | 1524*340*967 | |
| 36 | 301060053 | Copper nut | 4 | M10 | |
| 37 | 301050039 | Copper hoop | 4 | Φ6 | |
| 38 | 301060054 | Copper connector | 4 | 7/16" to M10 | |
| 39 | 21107001072 | Main fire intake pipe of stove | 2 | | |
| 40 | 301060052 | Copper connector | 4 | 11/16" to M16 | |
| 41 | 301030039 | Oven safety valve | 2 | TS11J-3211-1-0 | |
| 42 | 301030041 | Kindling support（NG） | 2 | | |
| | 301030042 | Kindling support（LP） | | | |
| 43 | 301030049 | Thermocouple | 2 | | |
| 44 | 301050036 | Pilot fire exit tube of stove | 2 | | |
| 45 | 301050042 | Pilot fire intake pipe of stove (right) | 1 | | |
| 46 | 301050014 | Male copper elbow | 2 | M16 to 3/8"-27UNS | |
| 47 | 301080008 | Bronze locknut | 2 | | |
| 48 | 301040030 | Oven burner nozzle(NG) | 2 | NG39 Φ2.5 | |
| | 301040027 | Oven burner nozzle（LP） | | LP52 Φ1.6 | |
| 49 | 21107001061 | Side block panel (right) | 1 | 698*752 | |
| 50.1 | 301990036 | wheels without brake | 2 | | |

| | | | | | |
|---|---|---|---|---|---|
| 50.2 | 301990035 | wheels with brake | 2 | | |
| 51 | 21107001062 | Radiant panel of stove | 2 | 553*607 | |
| 52 | 21407001005 | Stove base plate | 2 | 668*662 | |
| 53 | 301100012 | Stove net rack | 4 | 670*642 | |
| 54 | 301060001 | Needle type pressure measuring connector | 1 | NPT 1/8"-27 | |
| 55 | 301060002 | Needle type pressure measuring connector screw | 1 | M5*23 | |
| 56 | 21107002067 | Catch tray of gas restaurant ranges (right) | 1 | 605*625 | |
| 57 | 301010011 | Stove burner | 2 | | |
| 58 | 301050044 | Pilot fire inlet tube of stove (right) | 1 | Φ6 L=1920 | |

## Appendix 3. Accessories List

## AGR-10B(NG/LG)

| Accessory | Accessory No. | Quantity of accessories |
|---|---|---|
| wheels without brake | 301990036 | 2 pcs |
| wheels with brake | 301990035 | 2 pcs |
| Underside face plate of stove | 21107001064 | 2 pcs |
| Stove net rack | 301100012 | 4 pcs |
| Rear panel assembly of stove | 21207001007 | 1 pc |
| Galvanized hexagon head flange face self-tapping screw | 301081037 | 21 pcs |
| M6*12 stainless steel hexagon bolt | 301081019 | 2 pcs |
| M6 galvanized flat gasket | 301082001 | 2 pcs |
| M6 stainless steel spring washer | 301082018 | 2 pcs |
| Pressure maintaining valve | 301030044 (natural gas)<br>301030013 (liquefied gas) | 1 pc |
| Instructions and attached drawings | | 1 pc |

Our products have the advantages of good durability and low maintenance charge. But to update some components and necessary maintenance, can prolong life length of the products. Contact the dealer for assistance. To avoid confusion, please follow the format of “Appendix 2. Explosive view of product and parts” in this manual.