Specification/Datasheet

Mobile plate rack - model 10-full size, 26 plates

Article number

60.11.602

Description

Mobile oven rack to hold plated dishes, ideal for Finishing



Intended use

This product is intended for professional use, such as in restaurant kitchens or catering operations for schools, hospitals, or delis. Any other use runs counter to its intended purpose and could be dangerous. RATIONAL AG assumes no liability for the consequences of improper use.

Features

- Can hold up to 26 plates with a max. diameter of 12 1/4 in (310 mm)
- Device for locking the mobile plate rack in the unit

Technical specifications

Max. plate diameter:	12 1/4 in (310 mm)
Diameter of max. plate contact surface:	3 7/8 in (100 mm)
Plate edge height:	1 1/4 in (32 mm)
Max. food height:	2 3/4 in (70 mm)
Ring spacing:	3 in (76 mm)
Space between bottom rack and cooking cabinet opening:	1 1/4 in (33 mm)
Space between top rack up to the cooking cabinet opening:	3 1/2 in (88 mm)

Dimensions and weights

Width (W):	16 1/8 in (410 mm)
Height (H):	28 in (710 mm)
Depth (D):	24 3/4 in (630 mm)
Weight:	25.4 lb (11.5 kg)

Material

Stainless steel (CNS 1.4301/AISI 304)

Equipment/Scope of delivery

- Ceramic tube for core probe

Option, Note

- Optional with the mobile oven rack transport trolley standard or Combi-Duo and Thermocover
- Run-in rail standard or Combi-Duo intended for mobile oven rack

Specification/Datasheet

Mobile plate rack - model 10-full size, 26 plates

mm [inch]

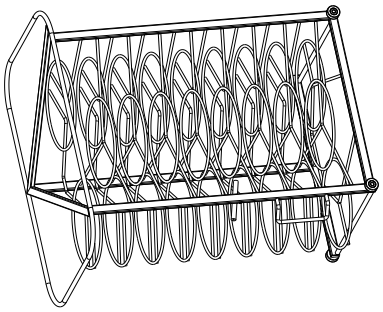

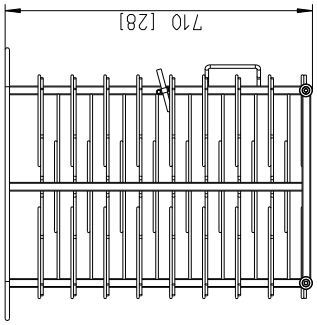

Seitenansicht
side view

Technische Änderungen vorbehalten
technical variation reserved

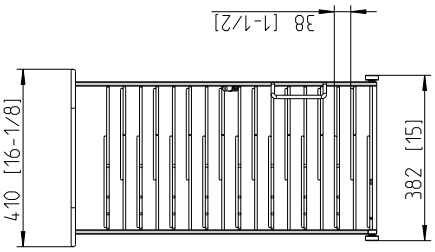

Vorderansicht
front view

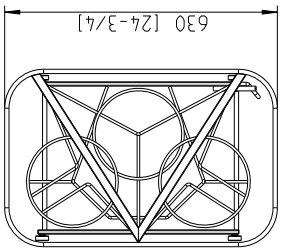

Draufsicht
top view