SPEED.Compact™

User manual

Translation of original instructions

20 - 02- 2025

Contents

1. Hello
2. Safety
3. Your SPEED.Compact™ oven
4. Basic concepts
5. Apps
6. Oven cleaning and maintenance
7. Disposal and recycling
8. Restarting, updating and resetting
9. Assistance and support
10. Copyright

1. Hello

SPEED.Compact™ is a single-serving high-speed cooking convection oven: the perfect mix between quality and speed.

Unimaginable performance, no compromises.

This booklet contains the information you need to use it correctly and at full potential.

If you do not fully understand any of the contents, please contact **UNOX** for further information.

2. Safety

- Symbols used in the manual
- Safety information
- Disposal and recycling information

Symbols used in the manual

Symbol	Meaning
	Read the instruction manual
	Danger! Situation presenting immediate danger, or a hazardous situation which could cause injury or death
	Risk of fire
	Risk of electric shock
	Risk of burns
	Electromagnetic radiation: do not open the compartments marked with this symbol

Safety information

Warnings, precautions, and notices

Failure to comply with the safety regulations, and any use or maintenance other than those indicated in this manual invalidates the warranty (for further details see www.unox.com, in the “Warranty” section), and relieves the manufacturer of all liability.

WARNING: Place this appliance out of the reach of children.

WARNING: Cleaning and maintenance must be done by the user and **not** by children, especially where not supervised by an adult.

WARNING: This appliance can only be used for cooking food in professional kitchens by qualified personnel, who have completed regular training courses. Warning: any other use is not compliant with the scope of use and is therefore hazardous.

WARNING: In the presence of faults, malfunctions or functional or structural alterations, disconnect the appliance from the power supply and immediately contact a **UNOX**-authorised customer assistance service. Unauthorised tampering makes the warranty void and poses a risk of serious injuries, even death. For any repairs, use only **UNOX** original spare parts.

WARNING: To ensure that the appliance is in perfect condition in terms of use and safety, maintenance and inspections should perform at least yearly by authorised service centre.

WARNING: **UNOX** reserves the right to make changes to improve the appliances and accessories at any time without advance notice.

WARNING: Full or partial reproduction of this manual is forbidden without the consent of **UNOX**. The measurements provided are approximate and not binding. In the event of disputes, this document was originally written in Italian. **UNOX** is not responsible for any translation/interpretation errors.

WARNING: The appliance emits a sound level of below 70 dB.

Warnings and precautions to prevent the risk of burns and injury

WARNING: Cooking can only take place with the door closed, for safety reasons. If the door is opened, the oven stops temporarily and a message appears on the display. To resume cooking, close the door again.

Do not use the oven in microwave mode with the cooking cavity empty.
Using the appliance without anything inside may cause it to overheat and damage the components in the system that generates the microwaves. Any component faults or defects caused by using the oven in microwave mode with the cooking cavity empty, or in any other usage conditions that do not comply with these instructions, are not covered by the manufacturer’s warranty.

WARNING: In order to maintain optimum performance, do NOT open the door during cooking, especially if you are using the microwave function. If it is not possible to avoid opening the door, please do so very slowly and carefully, paying attention to the hot steam coming out of the oven cavity.

WARNING: Wear appropriate protective thermal clothing and take great care when moving containers, accessories and other objects inside the oven cavity.

WARNING: **Do not** put highly flammable or heat-sensitive objects (e.g. plastic ornaments, lighters, etc.) near the appliance.

WARNING: The first time you use the appliance, some of the oils used for manufacturing may evaporate and produce fumes or unpleasant odours. These will gradually disappear as you continue to use the appliance.

WARNING: Liquids or other foods should not be reheated in sealed containers, as these may explode.

WARNING: To prevent burns, avoid using containers full of liquids or food that liquefies during the heating phase, especially on trays at levels difficult to see.

WARNING: If reheating beverages, these may reach boiling point and cause a delayed eruption. Be careful when handling the container.

WARNING: The content of baby bottles and baby food in jars must be mixed or shaken before consumption. Check the temperature to avoid scalding.

WARNING: Only use utensils and containers that are appropriate for the chosen cooking mode (quick or traditional).

WARNING: Reheating eggs in their shells or whole boiled eggs in the microwave can cause them to explode, even after reheating has finished.

Warnings and precautions to avoid excessive exposure to microwaves

WARNING: Do not attempt to use this appliance with the door open as this may lead to harmful exposure to microwaves. Do not circumvent or tamper with the safety systems.

WARNING: Do not position anything between the front of the oven and the door. Do not leave dirt or detergent residues to build up on the seals.

WARNING: Do not use the oven if it is damaged. The oven door must close correctly and there must be no damage to the following:

- door (curvature)
- hinges and catches (broken or loose)
- door seals and raised faces

WARNING: The oven must be adjusted or repaired by suitably qualified technical support staff only.

Warnings and precautions to prevent the risk of fire

WARNING: Before using the appliance, make sure that there are no non-compliant objects (e.g. instruction manuals, plastic bags, etc.) or detergent residues inside the oven cavity. Also make sure that the flue is free of obstructions and that there are no flammable materials in the vicinity.

WARNING: When reheating food in plastic or paper containers, check the oven. Risk of fire.

WARNING: If you notice any smoke coming from the appliance, disconnect the appliance from the mains power supply and keep the door closed to extinguish any flames.

WARNING: Do not place heat sources (e.g. grills, fryers, etc.), highly flammable substances or fuels (e.g. diesel, petrol, bottles of alcohol, etc.) near the appliance.

WARNING: The appliance must be cleaned daily, removing any food residue. Failure to carry out cleaning as indicated could cause the surfaces to deteriorate. This could reduce the life of the appliance and cause danger (if not removed, fats or food residue on the inside could catch fire).

WARNING: Do not clean the appliance with steam or a pressurised water jet.

WARNING: Do not use highly flammable food or liquids while cooking (e.g. alcohol).

Warnings and precautions to prevent the risk of electric shock

WARNING: Do not open the compartments marked with these symbols. Only qualified personnel authorised by **UNOX** may access these compartments. Failure to comply with this regulation invalidates the warranty (for further details see www.unox.com, in the “Warranty” section), and may cause damage or injury including death.

Warnings and precautions to perform routine maintenance

WARNING: Any routine maintenance must be performed:

- after disconnecting the appliance from the power supply and waiting for the capacitive components to discharge (approx. 5 minutes)
- after waiting for the appliance to cool down fully
- in perfect mental and physical shape, wearing suitable personal protective equipment (e.g. heat-resistant rubber gloves, eye protection devices, dust mask (optional), etc.)

WARNING: Carefully read the product safety data sheet before handling and using the detergent. **Never** touch the detergent with bare hands. The detergent must not come into contact with the skin, eyes or mucous membranes. In the event of contact with the detergent, refer to the safety data sheet.

WARNING: When cleaning any component or accessory **never** use:

- abrasive, pointy or sharp tools or cloths (abrasive sponges, scrapers, steel-bristled brushes, etc.)
- steam or pressurised water jets
- abrasive or powder detergents
- alkaline, aggressive, caustic or corrosive detergents (e.g. hydrochloric/muriatic or sulphuric acid or caustic soda)

WARNING: These substances may cause permanent damage to the appliance surfaces and catalysts. Do **not** use these substances even when cleaning the appliance substructure or the floor under the appliance. The volatile emissions from these compounds may still cause damage.

WARNING: Do **not** allow children to clean the appliance, especially when unsupervised by an adult.

WARNING: Periodically check for rust stains inside the oven cavity: if any are found, contact a service centre urgently because the water is probably damaging the oven; prompt action will extend the lifespan of the equipment.

Disposal and recycling information

Pursuant to article 13 of Italian Legislative Decree 49 of 2014 “Implementation of the WEEE Directive 2012/19/EU on waste electrical and electronic equipment”.

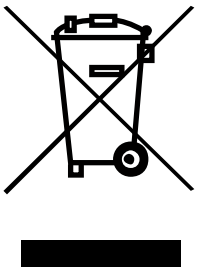

The crossed-out wheelie bin symbol specifies that the product was placed on the market after 13 August 2005 and that at the end of its useful life it should be collected separately and not disposed of with other waste. All appliances are made with recyclable metal materials (stainless steel, iron, aluminium, galvanized steel, copper, etc.) in percentages above 90% by weight. Before disposal, ensure the appliance is unusable by removing the power cable and all compartment or cavity closure devices (where present). At the end of its useful life, the product must be disposed of in such a way as to reduce any negative impact on the environment and make efficient use of available resources. Prefer prevention, preparation for reuse, recycling and reclamation, and remember “the polluter pays”. Please remember that illegal or incorrect disposal of the product incurs penalties, as provided for by current legislation.

Disposal in Italy

In Italy, WEEE appliances must be delivered to:

- recycling centres (also known as waste disposal sites/facilities)
- the dealer from whom the new appliance is purchased, who is required to collect them free of charge (“one-for-one” collection)

Disposal in European Union countries

The EU Directive on WEEE appliances has been implemented differently by each country. Therefore, if you want to dispose of this appliance, we recommend you contact your local authority or dealer for information on the correct disposal method.

3. Your SPEED.Compact™ oven

- SPEED.Compact™ features

SPEED.Compact™ features

SPEED.Compact™ is a single-serving high-speed cooking convection oven: the perfect mix between quality and speed.

How SPEED.Compact™ works

With SPEED.Compact™, you can use convection cooking adding the microwave to speed up the process.

Some examples?

- Toasted sandwiches in 70 seconds
- Frozen pizza in 70 seconds
- Chicken nuggets in 150 seconds

SPEED.Plate, the single-serving tray that ensures the highest performance, has a dedicated position in the SPEED.Compact™ cavity.

SPEED.Compact-X™'s new features

Control panel

The innovative control panel has been completely redesigned to ensure an unparalleled user experience. A fresh, simple and intuitive design that allows you to monitor and control your oven with the speed of a touch.

Guided cleaning procedure

We wanted SPEED.Compact™ oven to be easy to clean. To ensure optimal results, we added a guided procedure, a liquid and crumb tray, and QUICK.Rinse.

Microwave

The position of the heating elements has been designed to maximise uniformity in the electromagnetic field when loads are positioned on the SPEED.Plate.

Ventilation system

The shape of the cavity and the size of the fan have been designed to achieve the highest possible air speed in the cavity and make heat exchange more efficient.

4. Basic concepts

- Symbols used in the manual
- Control panel
- UIP technology

Symbols used in the manual

Symbol	Gesture
	Tap Tap the screen gently with one finger
	Press and hold down Press and hold your finger on the screen until the desired action starts
	Drag right Drag your finger from left to right
	Drag left Drag your finger from right to left

Control panel

Home Page Navigation

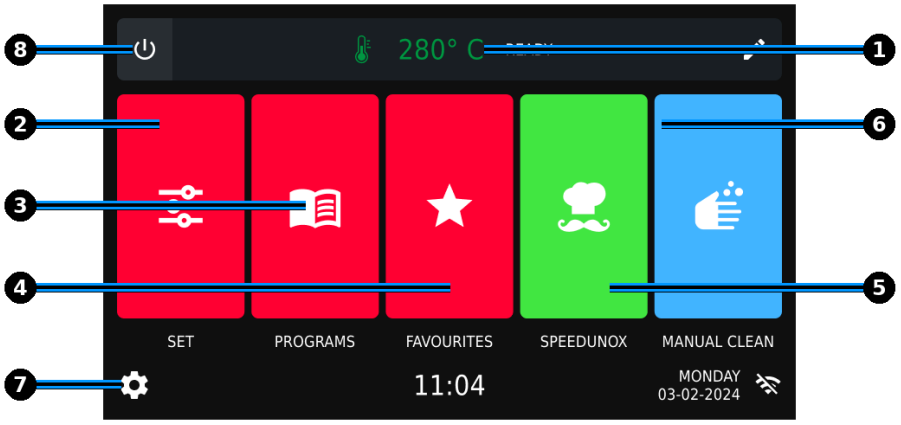

1 Serving temperature: preset the temperature to have the oven ready for use, avoiding preheating for the first cooking cycle.

2 Set: set cooking processes clearly and in a user friendly way. All parameters are included in one screen. For each of the 9 cooking steps available, you can set the cooking time and constant temperature, microwave or the fan speed.

3 Programs: all your set and saved recipes.

4 Favourites: contains all programs marked as favourite.

5 SPEEDUNOX: all preset automatic programs.

6 Manual cleaning: allows you to start the manual guided cleaning procedure of the oven cavity.

7 Settings: access the general settings. To do so, set the oven to OFF. No preset must be active in the cavity.

8 OFF key: set the oven and the control panel to standby. The cooling function starts if the oven temperature exceeds 30°C.

To restart the oven, tap any point on the panel.

Lock screen with door open

For safety reasons and to achieve excellent performance and results, keep the door closed when cooking.

If you open the door during cooking, the oven heating elements are deactivated, the fan stops and a notification tells you that the display is temporarily locked.

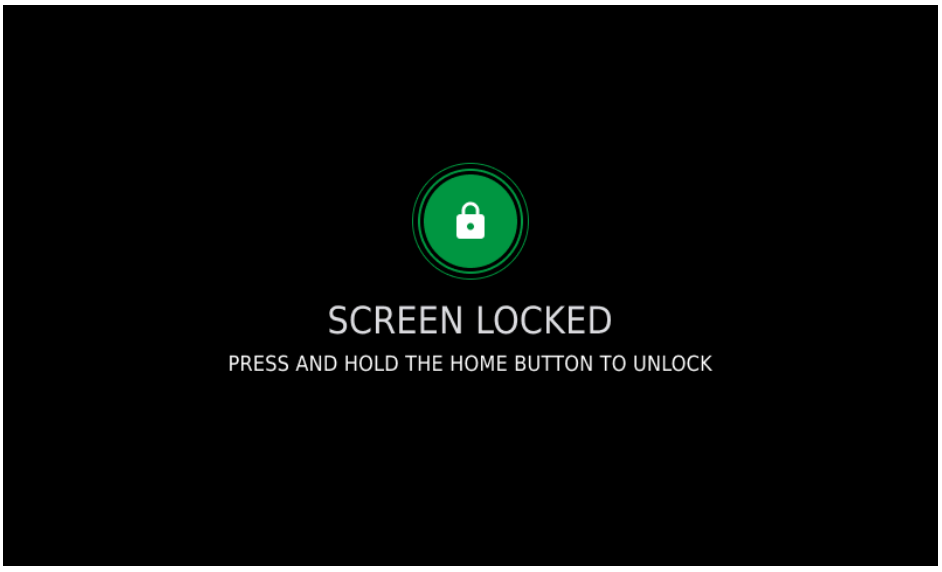

UIP technology

UIP (Unox Intelligence Performance) technology allows the oven to constantly monitor each preheating and cooking process.

The software managing the oven independently modifies the conditions to ensure the cooking results always perfect.

Below you will find the UIP technology available on your oven:

SMART.Energy ▸ Reduces the amount of energy used to optimise the oven's consumption

SMART.Preheating ▸ (active by default) automatically adjusts the preheating time and temperature to guarantee maximum cooking uniformity and energy efficiency; it also takes into account the dispersion of heat when you open the door and is activated in the passages from one phase to another, adapting the cooking cavity to the new parameters of the phase

ADAPTIVE.Cooking ▸ (active by default) thanks to the oven sensors, optimises all cooking parameters according to the load and the door opening frequency

5. Apps

- Serving temperature
- Settings
- Programs
- Favourites
- SPEEDUNOX
- Guided cleaning procedure

Serving temperature

- Setting the serving temperature
- Activate UIP (Unox Intelligence Performance) technology

Setting the serving temperature

A screen appears upon starting the oven. Selecting a preset temperature for the cavity. We recommend choosing a preset before carrying out any other operation to ensure maximum service speed. By setting a constant cavity temperature, you won't need preheating.

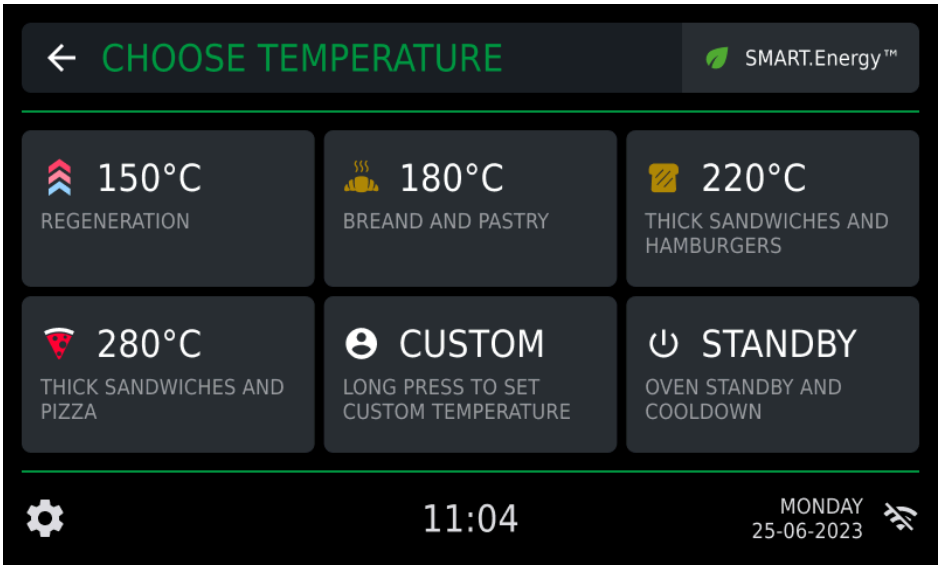

If the temperature you want is not included among those preset, you can customise the temperature by holding down the custom key.

If you skip this step, or if the cavity's temperature is not set correctly, tap the temperature bar on the top of the main screen to access the preset selection page.

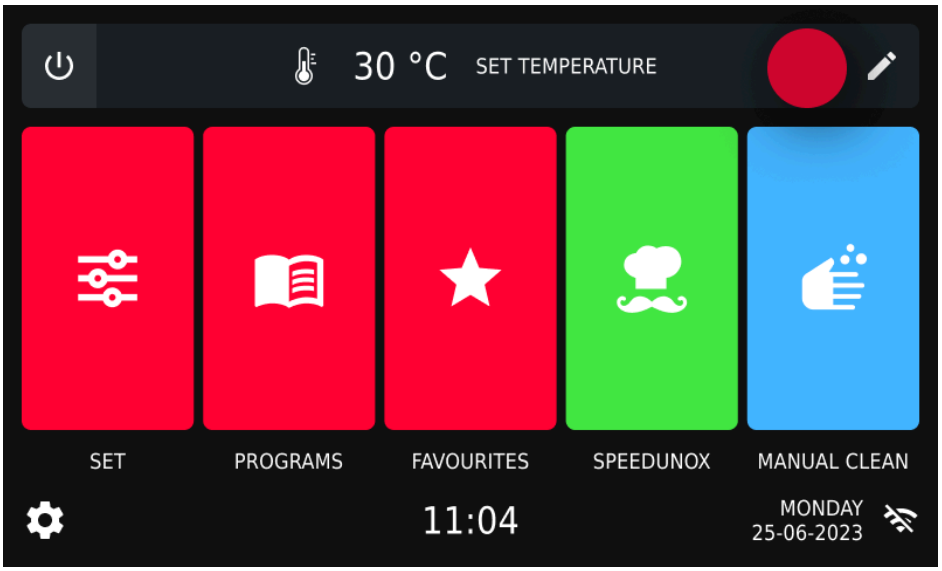

Activate UIP (Unox Intelligence Performance) technology

To enable or disable the SMART.Energy consumption optimisation function, open the cavity's temperature preset section. Tap the SMART.Energy key. A page opens where you can enable, disable and manage the function's parameters.

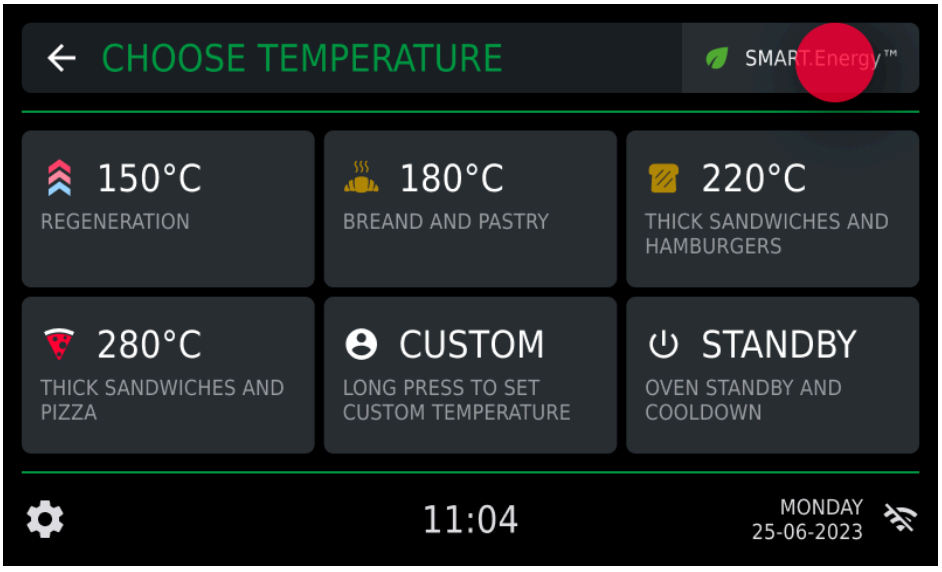

The SMART.Energy page allows you to:

- Enable/disable the technology

- Change the activation time
- Select your favourite energy efficiency mode

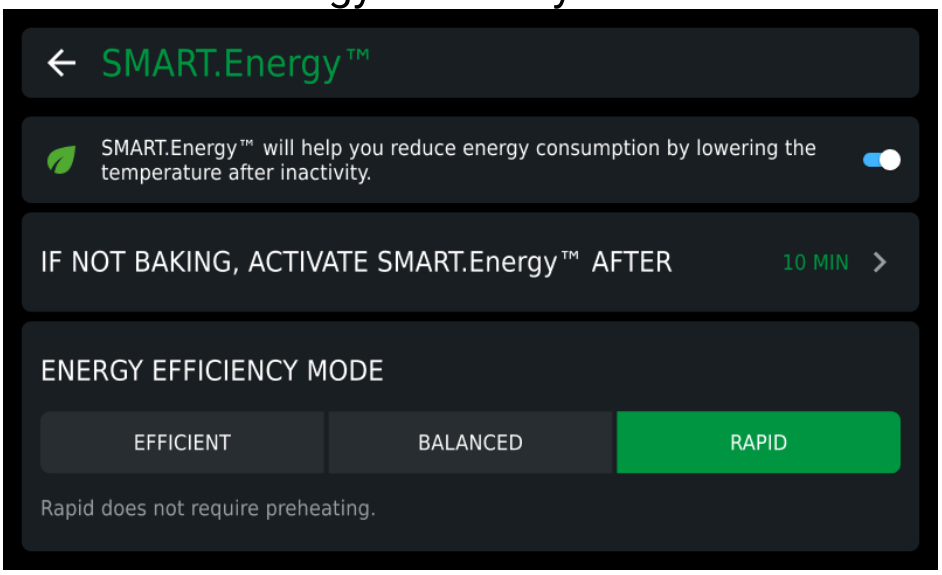

Apps

Settings

- Setting manual cooking
- Activate UIP (Unox Intelligence Performance) technology
- Adding a new cooking step
- Preheating
- Starting a cooking cycle
- During a cooking cycle
- Ending a cooking cycle
- After cooking
- Saving a manual cooking cycle after cooking

Starting a manual cooking cycle using the Set setting

In manual cooking cycles you must set the following parameters independently:

- **cooking time**
- **cavity temperature**: if a cavity temperature preset is active, you will find the same temperature of the selected preset (editable)
- **microwave**: microwave intensity
- **fan** speed

Each manual cooking cycle is always composed of:

- **SMART.Preheating** or a matching preheating cycle with the temperature set for the first cooking step
- from one to **nine cooking steps**, even with different cooking parameters

After setting all the parameters, you can either:

- start the cooking cycle without saving it
- save the set recipe and then start the cooking cycle (saved recipes are stored in the Programs app)

Setting manual cooking

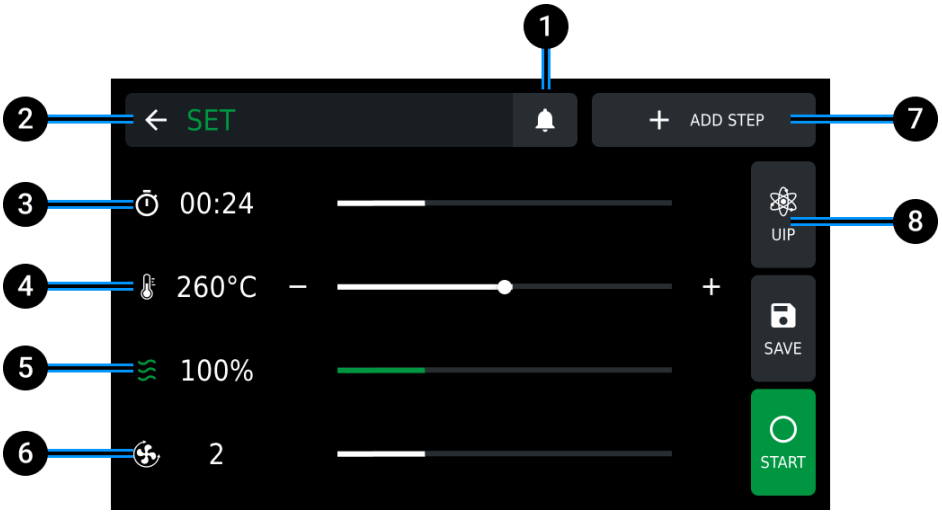

1 **cooking notifications**: you can activate customised cooking notifications that will appear between one cooking step and another

2 **back**: you can return to the **home page**

3 **edit cooking step duration** from 0 to 9min:59sec

4 **edit cavity temperature** from 30°C to 280°C

5 adjust microwave intensity

6 **change fan speed**

7 add a **new cooking phase**

8 **UIP**: you can edit activation of the Unox Intelligence Performance technology (not recommended)

Remove a cooking phase: it sets the cooking time to 00:00. After you start or save a setting, these and the subsequent phases will be removed.

Activating UIP (Unox Intelligence Performance) technology

UIP (**Unox Intelligence Performance**) technology allows the oven to constantly monitor each preheating and cooking process.

To edit the technology settings:

- Tap the UIP key on the right-hand side of the settings screen when you're setting a new cooking cycle

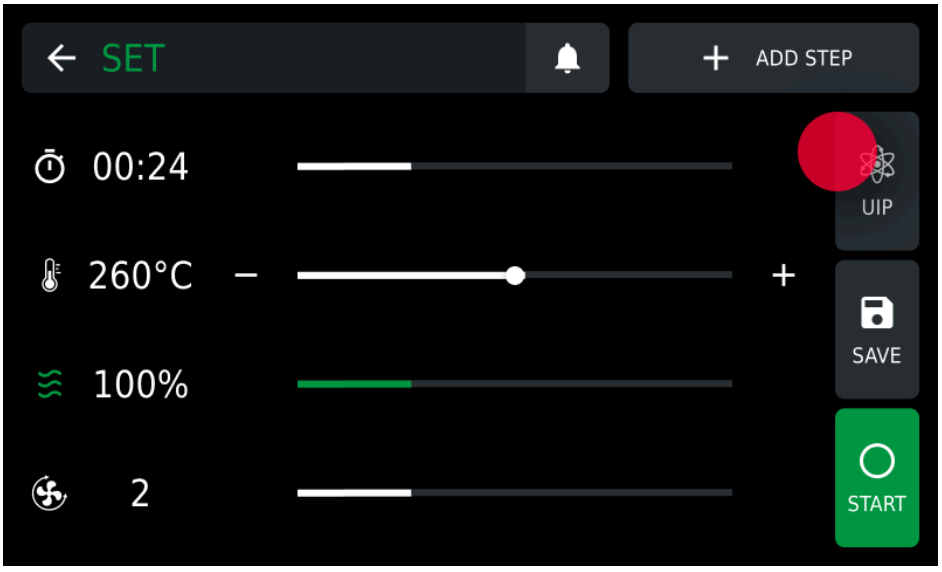

- activate or deactivate SMART.Preheating or ADAPTIVE.Cooking technologies by moving the cursor

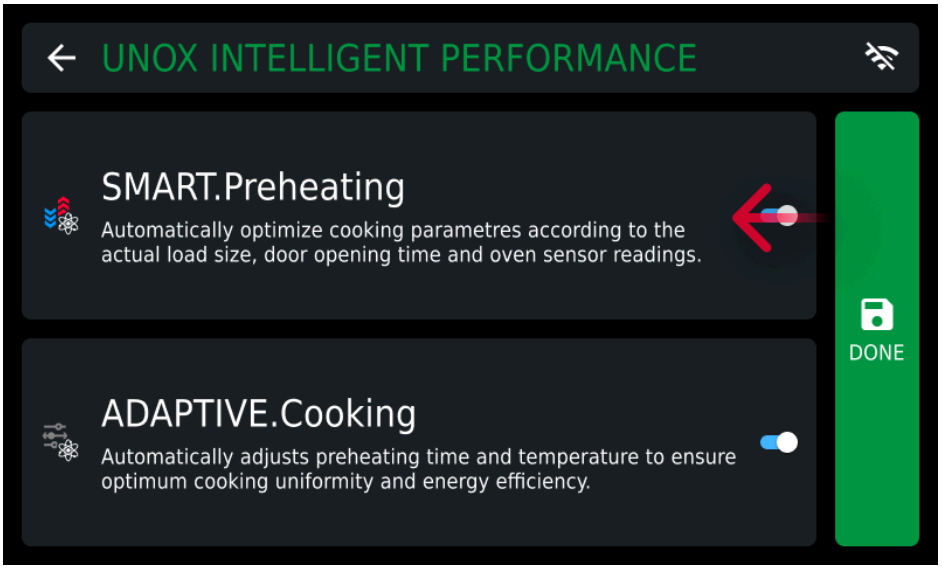

- to save and confirm changes, tap the **apply** key

Adding a new cooking step

If necessary you can create cooking programs with several steps; each step can have different parameters:

- tap add step

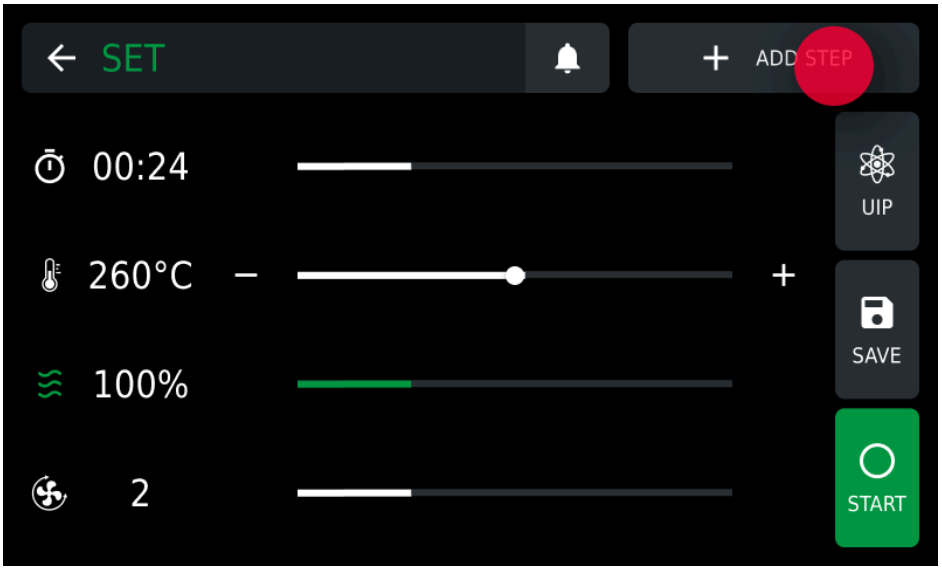

- set the cooking parameters based on your needs

Preheating

Before starting cooking, it’s important to heat the cavity to the right temperature. That’s why an automatic preheating cycle starts at the beginning of each cooking cycle.

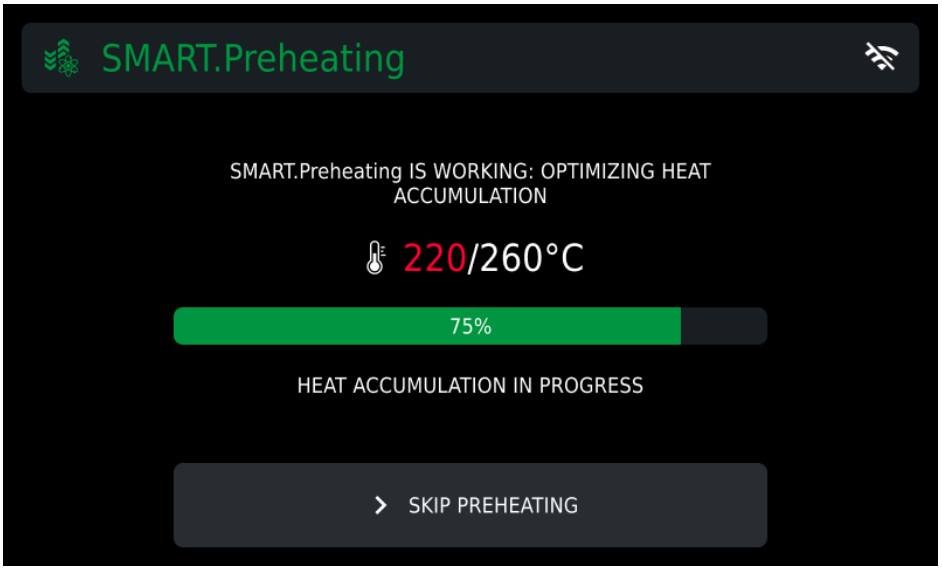

UNOX recommends that you use SMART.Preheating, an automatic preheating program that autonomously sets the preheating time and temperature; it also takes into account the dispersion of heat when you open the door and is activated when the oven moves from one step to the next, adjusting the oven cavity to the step’s new parameters.

Deactivating SMART.Preheating (not recommended)

To deactivate SMART.Preheating technology and manually set preheating, tap the UIP key and deactivate the technology by moving the cursor.

Stopping preheating

To stop preheating at any time, whether manual or SMART.Preheating, press the SKIP key.

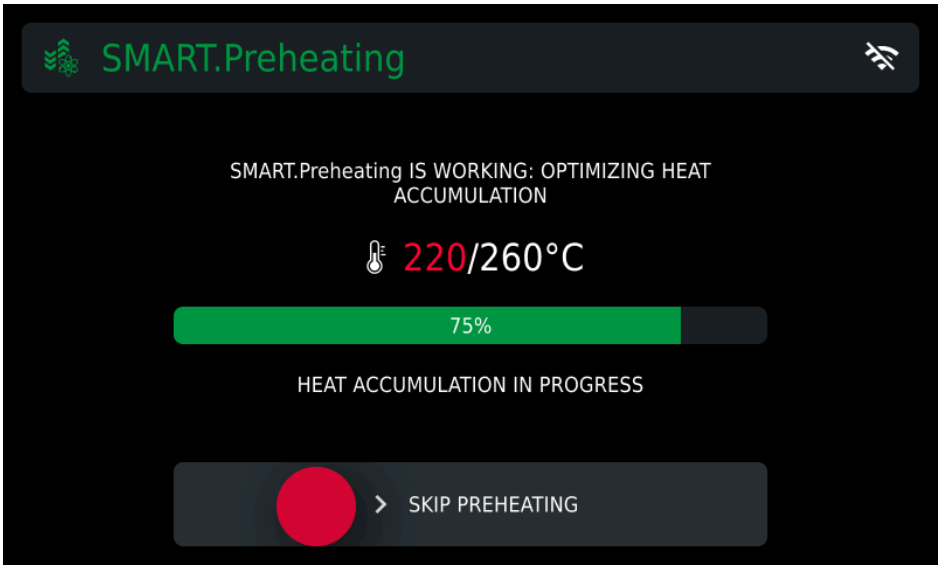

When preheating is complete or after it has been interrupted, a screen will remind you to put the food into the oven. The first cooking phase starts after the door is closed automatically.

Starting a cooking cycle

Tap **START**

to start the cooking cycle: a manual preheating or Smart.Preheating phase begins based on what you have previously set.

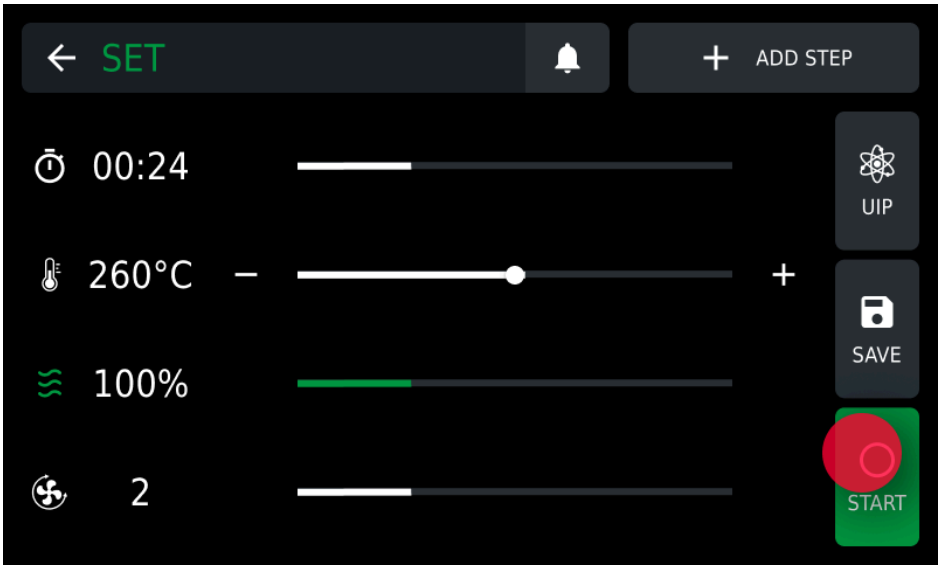

During a cooking cycle

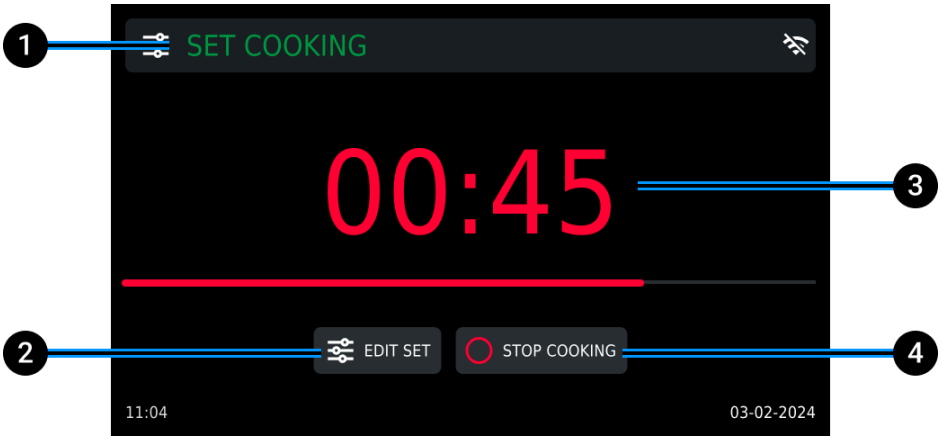

1 **name** of the cooking program in progress (“Manual program” = recipe not saved)

2 **set parameters** in progress: tap Edit Set to change the cooking parameters or add other cooking phases. The variations are valid only for the cooking cycle in progress

3 **end of cooking display bar**: the colour of the bar gives an intuitive indication of the end of the cooking cycle:

- Time > 30 seconds the time bar is **red**
- Time < 30 seconds the time bar is **yellow**
- Time < 15 seconds the time bar is **green**

4 **cooking interruption**

Ending a cooking cycle

Cooking cycles end when the time elapses.

Tap Stop Cooking to stop the cooking cycle in progress.

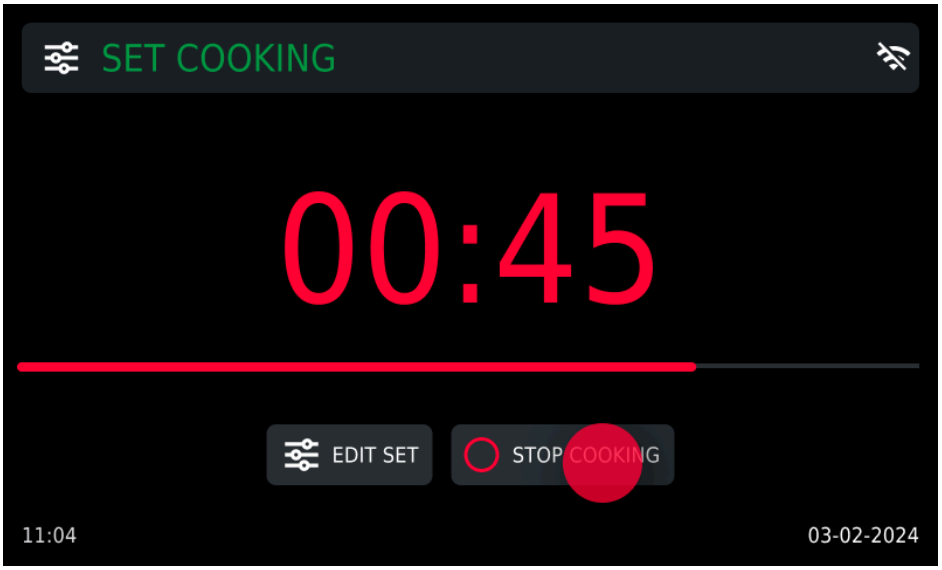

After cooking

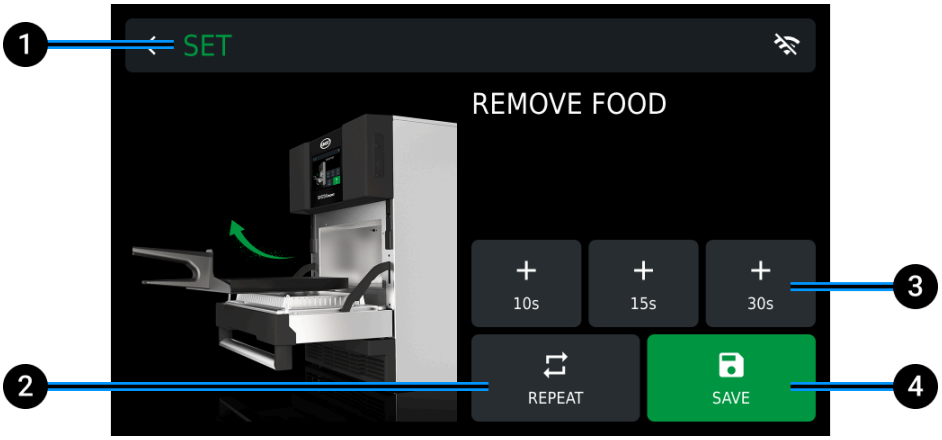

1 **exit** cooking

2 **repeat** the cooking cycle just ended with the same cooking parameters. You can change them as you wish

3 **add time** keeping the parameters of the completed phase

4 **save** the cooking cycle just ended; see how to [save a cooking cycle] here

---

Saving a manual cooking cycle after cooking

At the end of the cooking cycle you can save the recipe you have created:

- tap **save**

- choose the **photo** and the **name** to be assigned to your recipe

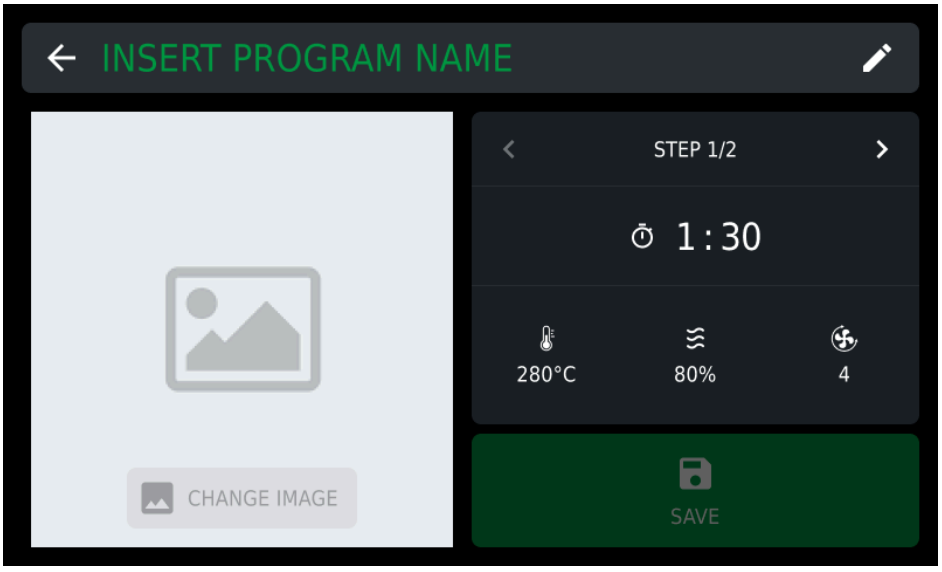

- confirm again with **save**

Saved programs are collected in the Programs application. Tap the program you want to start and then tap **start**.

Apps

Programs

- Browsing a program
- Exploring recipe options
- Starting a recipe
- Creating a personal recipe
- Uploading a personal recipe

Programs allows you to create or start a personal program you've previously saved.
Learn more on how to select and start a program.
Learn more on how to create a personal program.

Browsing and selecting a program

In the program section, you can start a cooking cycle by tapping the icon or by holding it down for 3 seconds. Access the details page, where you can edit the available recipe options.

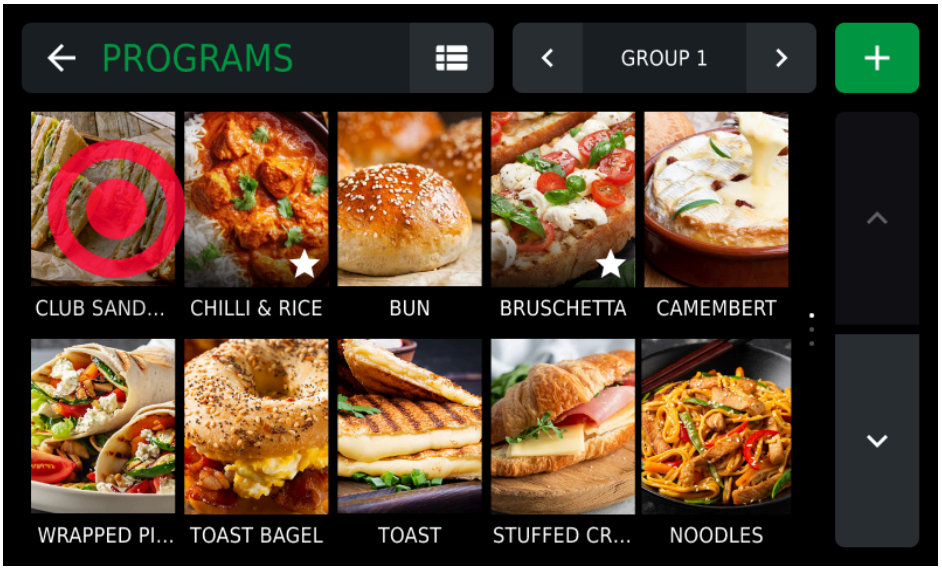

Exploring recipe options

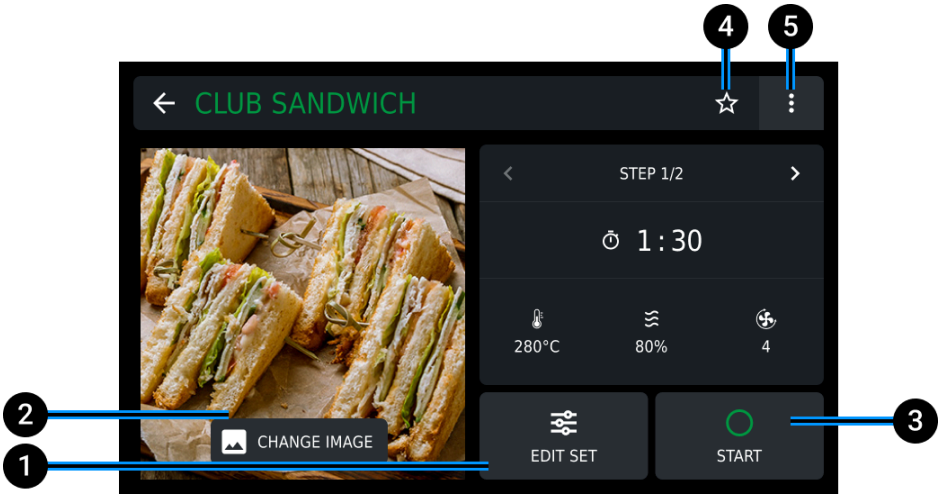

Press and hold a program for three seconds to access the details page, which displays the cooking parameters.
From this page, you can:

1. **edit the cooking parameters**

2. **edit the program image**

3. **start the program**

4. **add the program** to your favourites using the key (add a star icon and a link to the favourites section)

5. **access the menu** (add More icon) where you can:
- rename the program
- duplicate the program
- remove the program

Starting a recipe

Tap START

.

Upload a personal recipe

USB

You can import or export your recipes using a USB stick (FAT32 with 4 to 16 GB). The USB port is on the right-hand side of the panel. Connect your USB stick to import or export your recipes.

- **export programs**: export recipes from the oven to the USB stick
- **import programs**: import recipes from a USB stick to the oven
- **import picture**: import images from the USB stick to the oven e.g. the photo of a successful dish. Convert images to use them (image 2)

The rubber cover on the USB and reset board is designed to protect the internal components against contaminating environmental agents. It should remain firmly in position at all times, unless the USB-A port is being actively used.

Permitted use: the oven can be used with the cover pulled back only during a firmware update or when importing/exporting menus.

All other operations must be performed with the cover correctly sealed to avoid any damage caused by dust, humidity or other contaminating agents in the air.

Failure to keep the cover in place in situations other than those mentioned may lead to performance reduction, component faults or electrical problems.

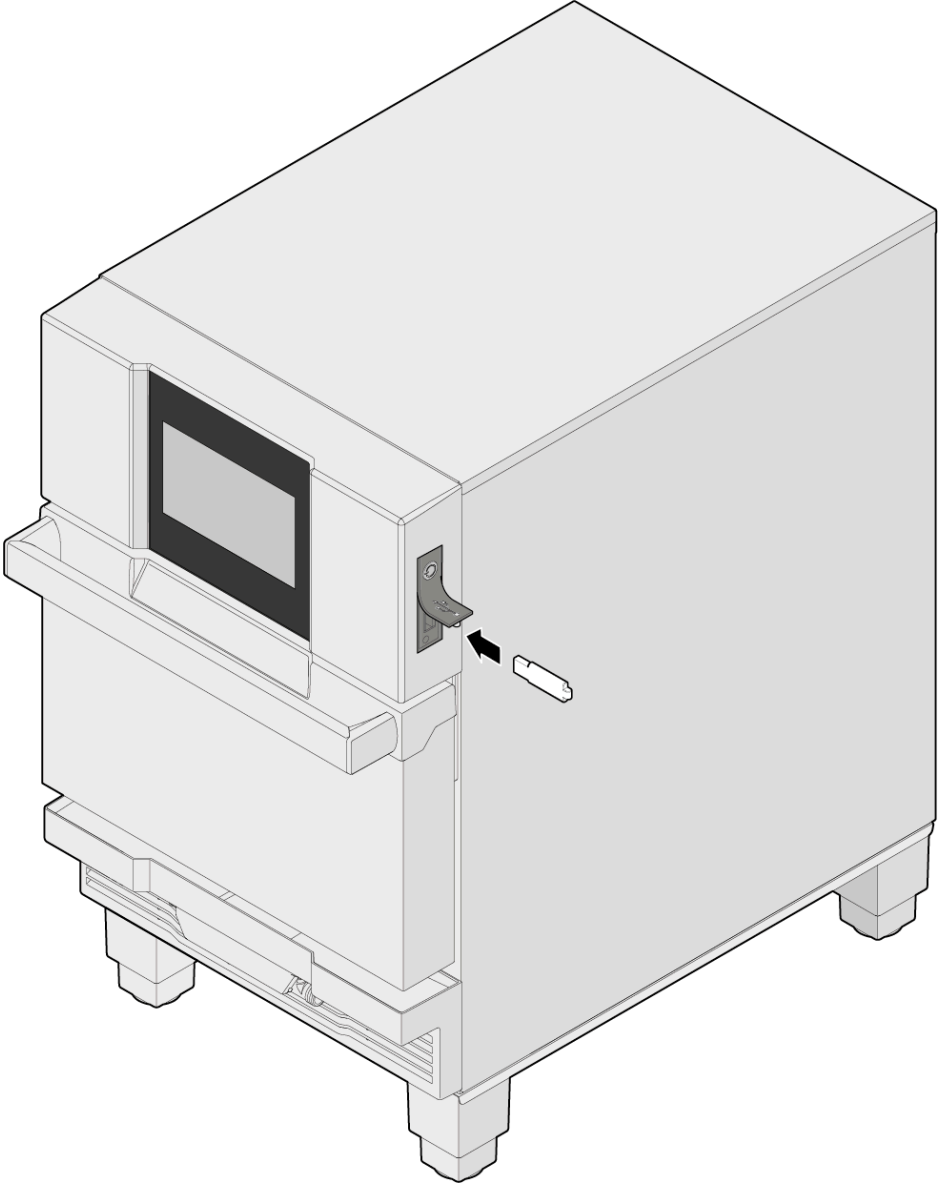

image 1

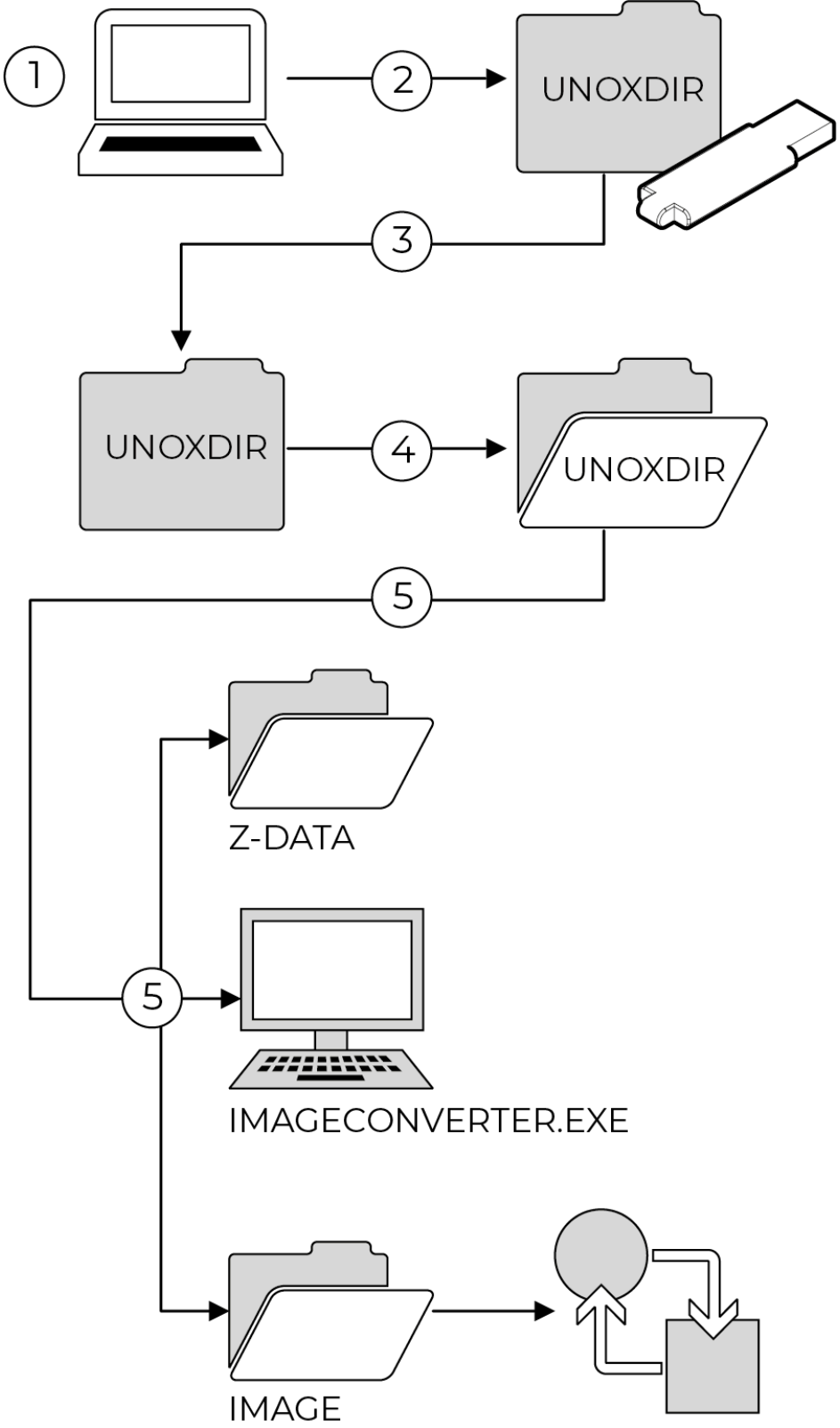

image 2

DDC (DATA DRIVEN COOKING)

Send cooking programs to the oven from the app or a computer.

https://ddc.unox.com/

Favourites

- Favourites

The favourite section displays up to 10 programs in one screen. These programs are selected from the library to make the most used ones easily accessible.

Editing or removing a program from your favourites:

Press and hold the program card and select the action you want to take.

Adding a program to your favourites:

Programs

Favourites

You can select 10 favourite programs. This option is designed to ensure a quick service.

In the favourites section, you can start the programs by tapping the icon or holding it down for 3 seconds to access the details page. Here you can:

- **Edit a program** (the edit will be applied to the Programs section as well).

- **Remove a program from your favourites** (it will only be removed from the Favourites section)

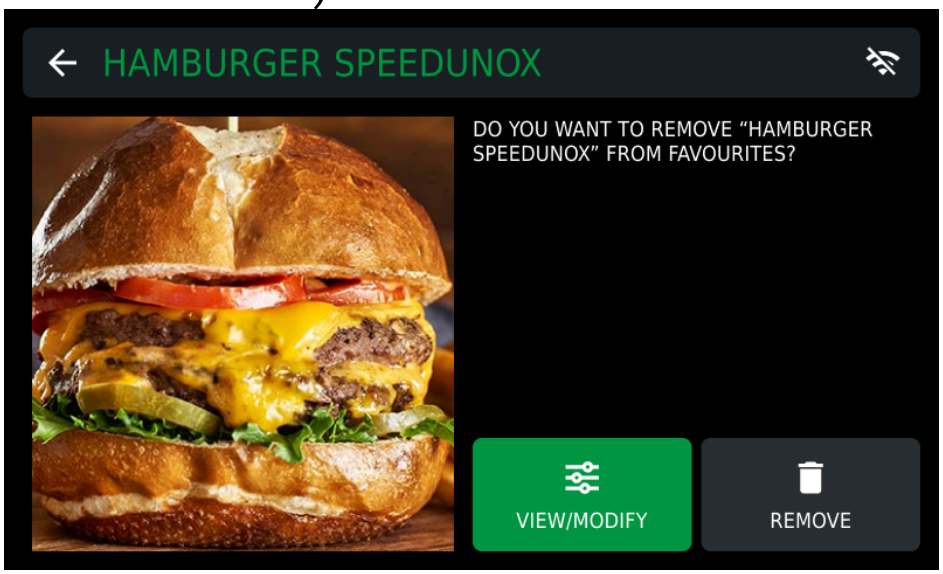

Apps

SPEEDUNOX

- Browsing and selecting a program
- Exploring program options
- Starting a SPEEDUNOX program

With SPEEDUNOX, you can use the programs created and tested by the **UNOX** chefs to achieve excellent cooking results.

Browsing and selecting a program

To select a SPEEDUNOX program, tap its icon.

Exploring program options

From the recipe card you can:

- mark a program as a **favourite** by tapping the icon ☆. This adds it to the Favourites section
- start the program

Starting a SPEEDUNOX program

Tap start

to start the cooking cycle.

Apps

Guided cleaning procedure

- Safety warnings and precautions
- Starting a guided cleaning procedure
- Spray&Rinse reaction in progress

Safety warnings and precautions

Carefully read the product safety data sheet before handling and using the detergent. **Never** touch the detergent with bare hands. The detergent must not come into contact with the skin, eyes or mucous membranes. In the event of contact with the detergent, refer to the safety data sheet.

Do **not** allow children to clean the appliance, especially when unsupervised by an adult.

Periodically check for rust stains inside the oven cavity: if any are found, contact a service centre urgently because the water is probably damaging the oven; prompt action will extend the lifespan of the equipment.

Any routine maintenance must be performed:

- in perfect psychophysical shape
- after putting on suitable personal protective equipment (e.g. heat-resistant rubber gloves, eye protection, dust mask (optional), etc.).

Clean the appliance on a daily basis in order to maintain a good level of hygiene and to prevent the stainless steel from corroding or deteriorating.

Daily cleaning also reduces the possibility of accumulated fatty substances or food residues inside the cavity catching fire and becoming a fire hazard.

When cleaning any component or accessory NEVER use:

- abrasive, pointy or sharp tools or cloths (abrasive sponges, scrapers, steel-bristled brushes, etc.);
- steam or pressurised water jets;

- abrasive or powder detergents;
- alkaline, aggressive, caustic or corrosive detergents (e.g. hydrochloric/muriatic or sulphuric acid or caustic soda). These substances may cause permanent damage to the appliance surfaces and catalysts.

⚠ Do not use these substances even when cleaning the appliance substructure or the floor under the appliance. The volatile emissions from these compounds may still cause damage.

The appliance has a VOC catalyst behind the internal cooking cavity wall which cleans the flow of recirculating air.
If the catalyst is exposed to chemical detergents containing phosphates, NaOH, silicates, Na or potassium salts, these may cause irreversible damage. These chemical products are found in the majority of commercially available degreasers and detergents. Therefore, we recommend using the SPRAY&Rinse™ detergent, specifically designed for the SPEED.Compact™ to preserve performance.

Starting a guided cleaning procedure

⚠ Wait for the appliance to cool down fully.

⚠ Clean the oven daily.

1 Clean seal “C” using a soft cloth dampened in warm, soapy water

2 Start the “MANUAL CLEANING” function by tapping the icon on the oven home screen.

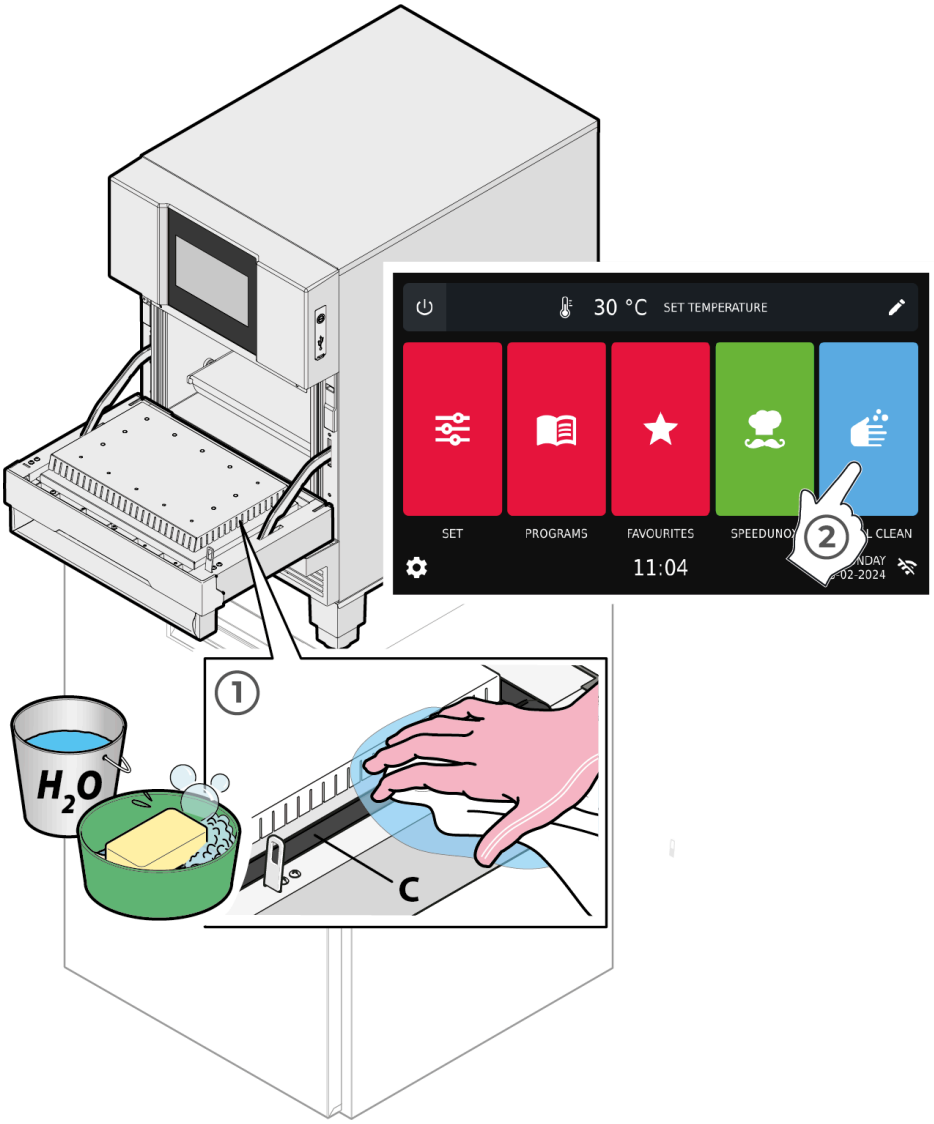

If the oven temperature is **higher** than required, a screen will show and a cooling phase will start (the door needs to be open). Wait for the SPEED.Compact™ to reach the optimal temperature.

DO NOT spray any type of detergent yet.

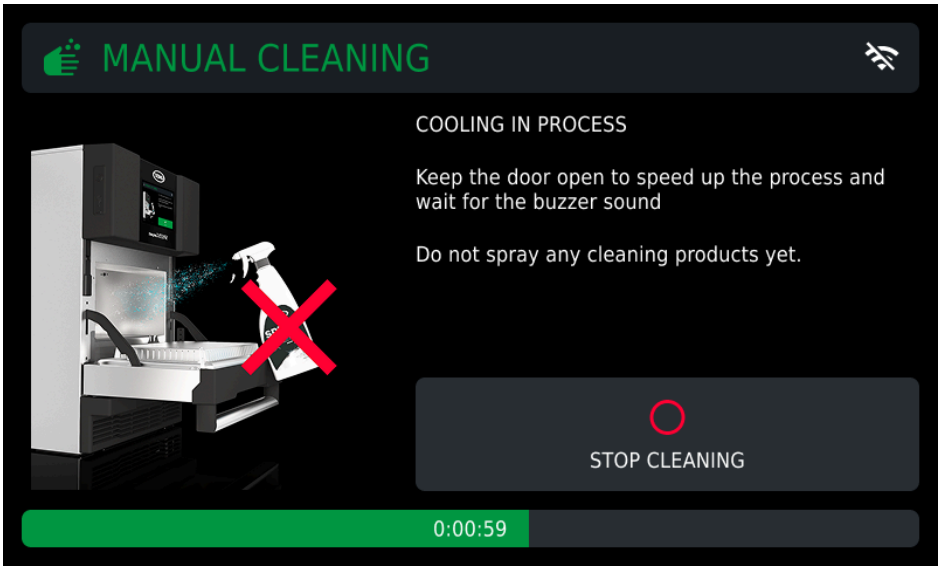

the oven temperature is above the required temperature: wait for the cooling phase to end

Open the oven door and remove the plate or baking tray “A”. Wash the plate/trays using a soft sponge and warm, soapy water. Rinse and dry carefully.

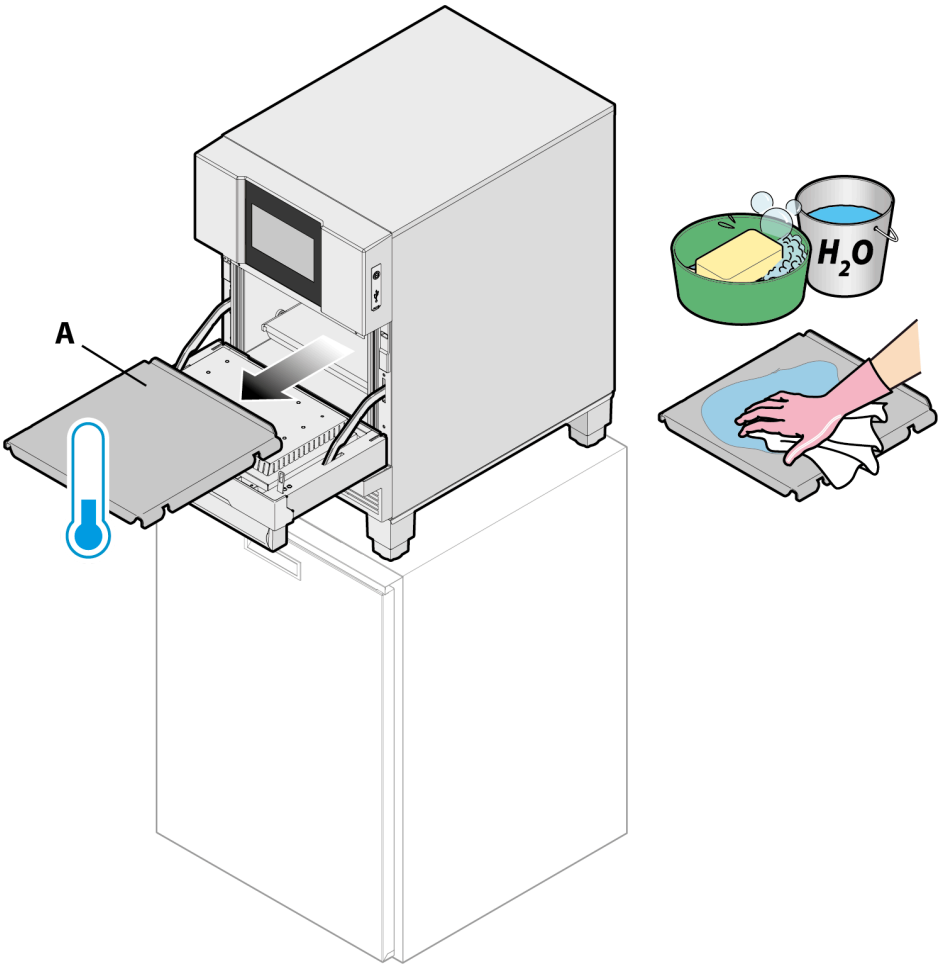

Once the oven has reached the optimal temperature for cleaning, remove the more substantial food residues from the oven cavity using kitchen roll or a clean, dry oven cleaning brush.

DO NOT spray any type of detergent yet.

Frequently remove crumbs from inside the cavity and in particular from the **slots labelled “B”** in the panel behind the door.

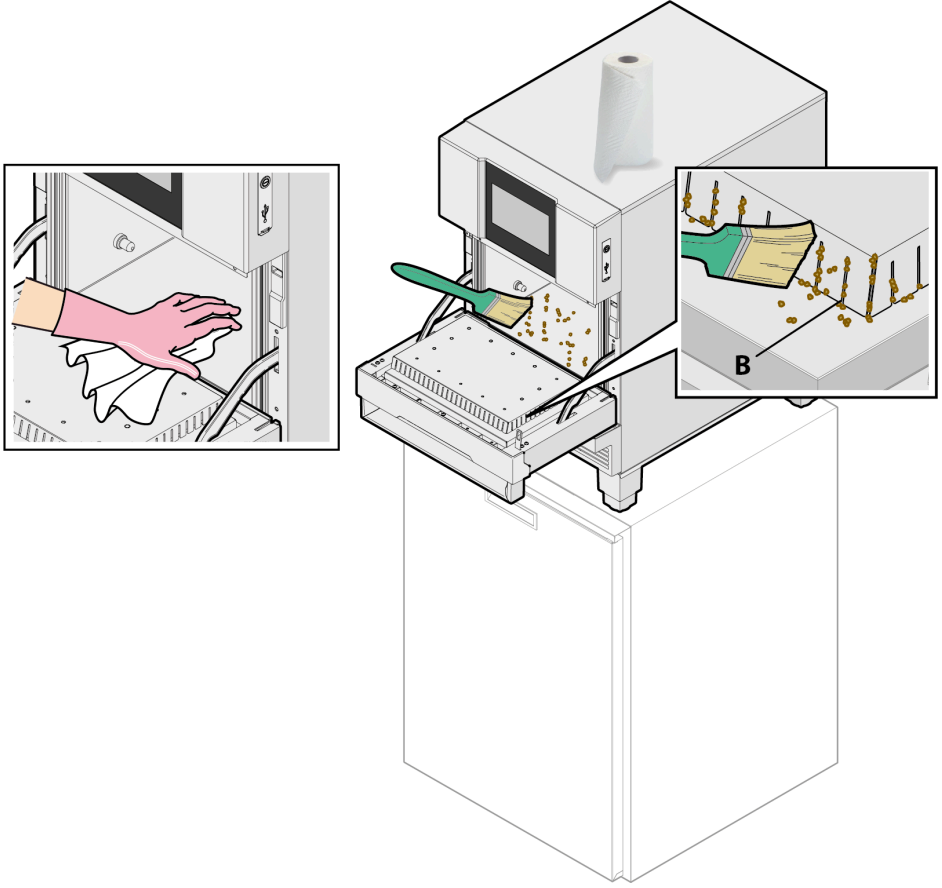

Install the QUICK.Rinse kit.

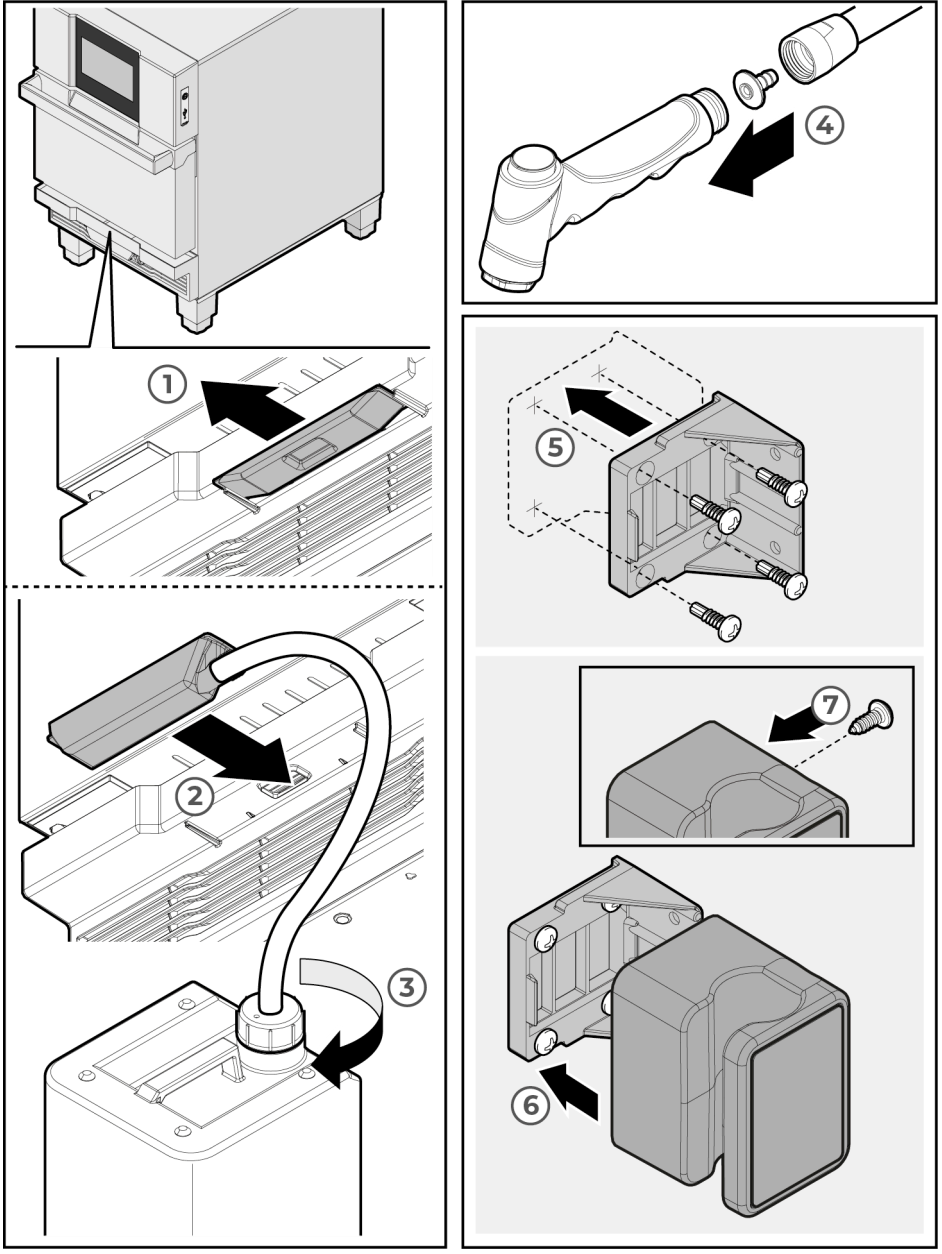

Wear rubber gloves and goggles and spray a sufficient amount of UNOX's SPRAY&RINSE inside the oven cavity, without exaggerating.
DO NOT spray UNOX's SPRAY&RINSE product on door seal "C" as this may cause damage over time.
By using this detergent, you are guaranteed excellent cleaning results. The product is fully compatible with the materials this appliance is made from. Alternatively, use only warm soapy water.

RISK OF FIRE: DO NOT use flammable detergents or detergents that contain potentially flammable substances. Use UNOX SPRAY&Rinse detergent only or warm soapy water.

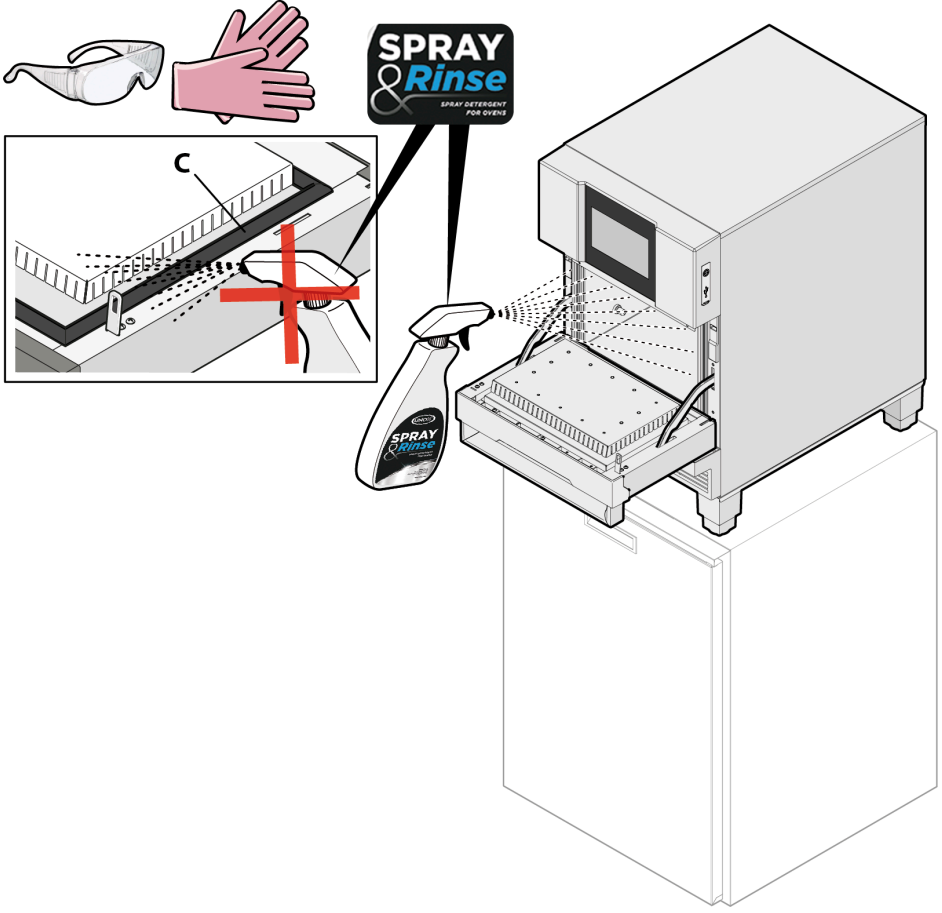

After spraying the UNOX SPRAY&Rinse detergent, **LEAVE THE OVEN DOOR OPEN** and wait for the cleaning process to finish (approx. 10 minutes). The time elapsed is shown on the screen.

RISK OF FIRE: **LEAVE THE DOOR OPEN during cleaning.**

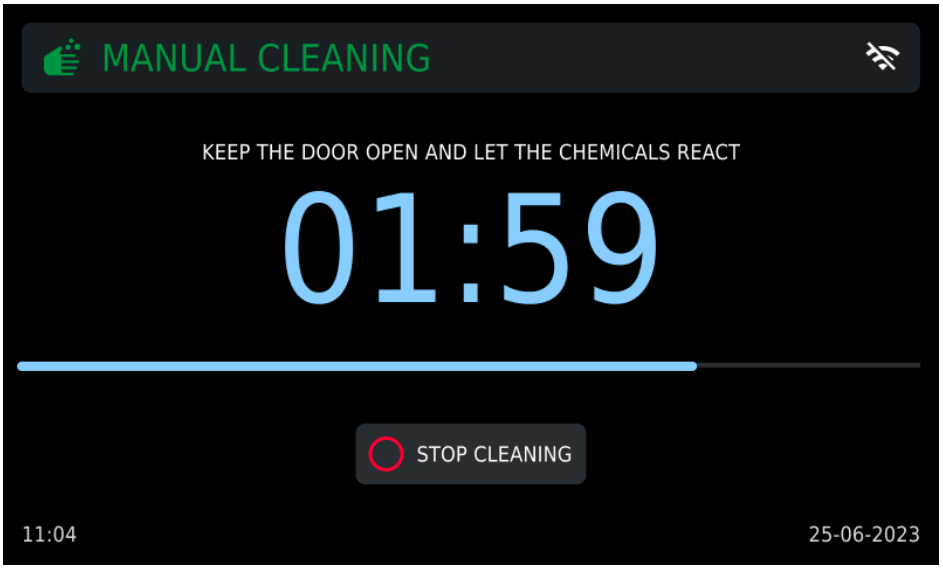

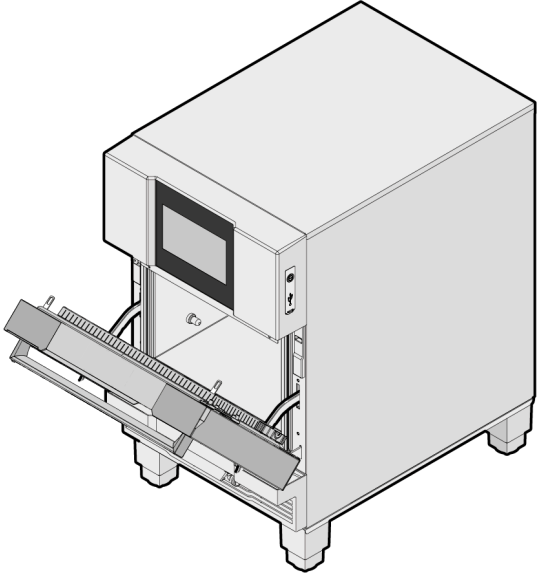

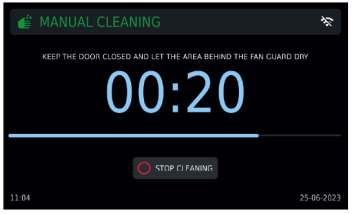

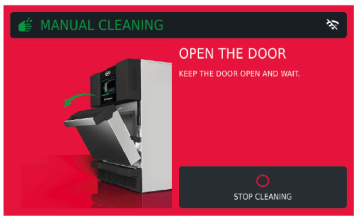

If the oven door is closed during the cleaning procedure, a red screen will show indicating that the door should be reopened, and an intermittent acoustic signal will sound.

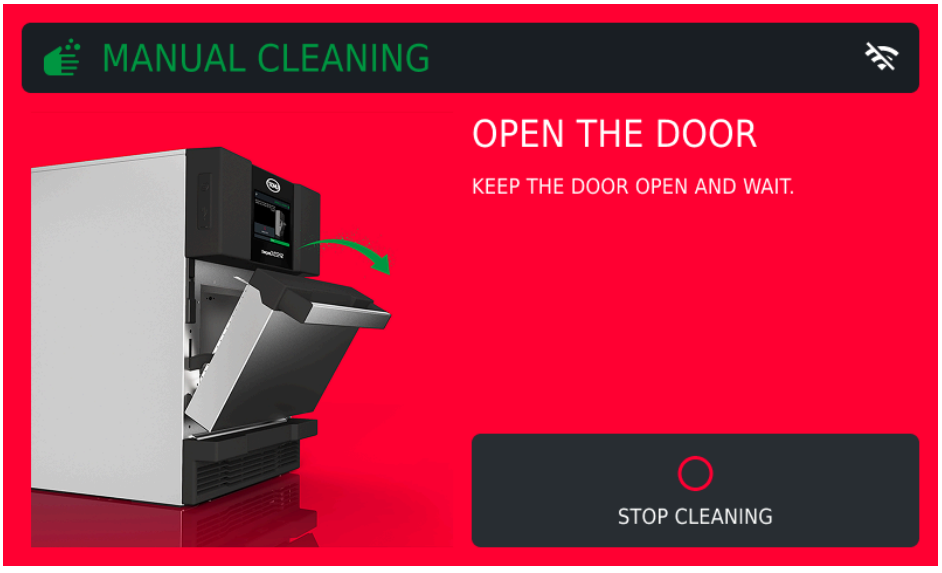

After a set time, an acoustic signal will sound and a screen will show indicating that the cleaning process with UNOX SPRAY&Rinse detergent has been completed and the softened food residue can be removed using a soft sponge. Do not use abrasive, pointy or sharp tools or cloths (abrasive sponges, scrapers, steel-bristled brushes, etc.).

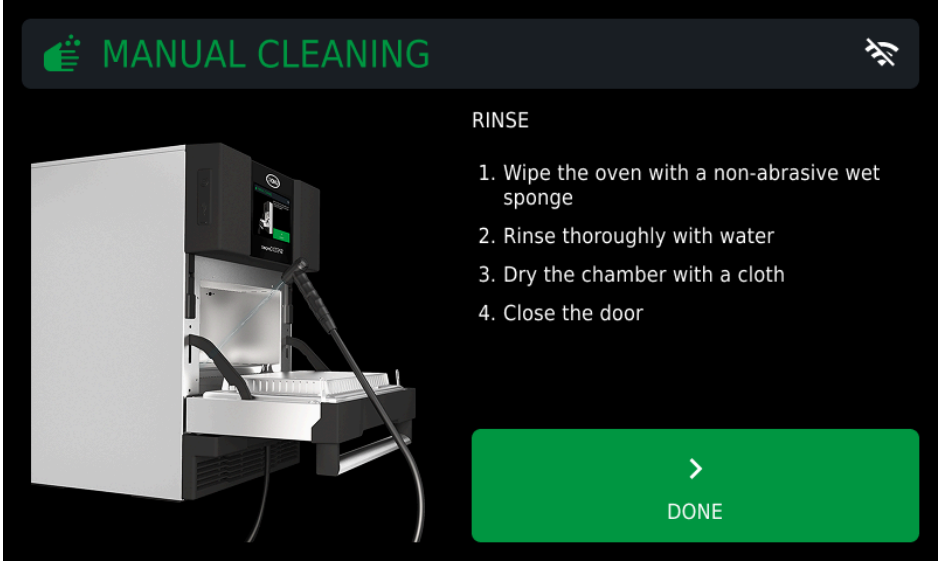

Rinse the oven cavity thoroughly using a damp cloth to remove any traces of detergent. Rinse the oven cavity using the hose included in the QUICK.Rinse kit, installed previously where applicable.

RISK OF FIRE: **RINSE THE OVEN CAVITY THOROUGHLY BEFORE CLOSING THE DOOR**. Any detergent residues, if not removed, can cause flammable vapours.

Dry with a clean cloth or kitchen roll.

Close the oven door again and wait for the drying process to finish.

Close the oven door and clean the **external steel surfaces** with a soft cloth, dampened with soapy water. Take care to avoid seepage under the control panel. Rinse and dry carefully. Wipe steel surfaces regularly with a soft cloth doused in Vaseline oil to protect them.

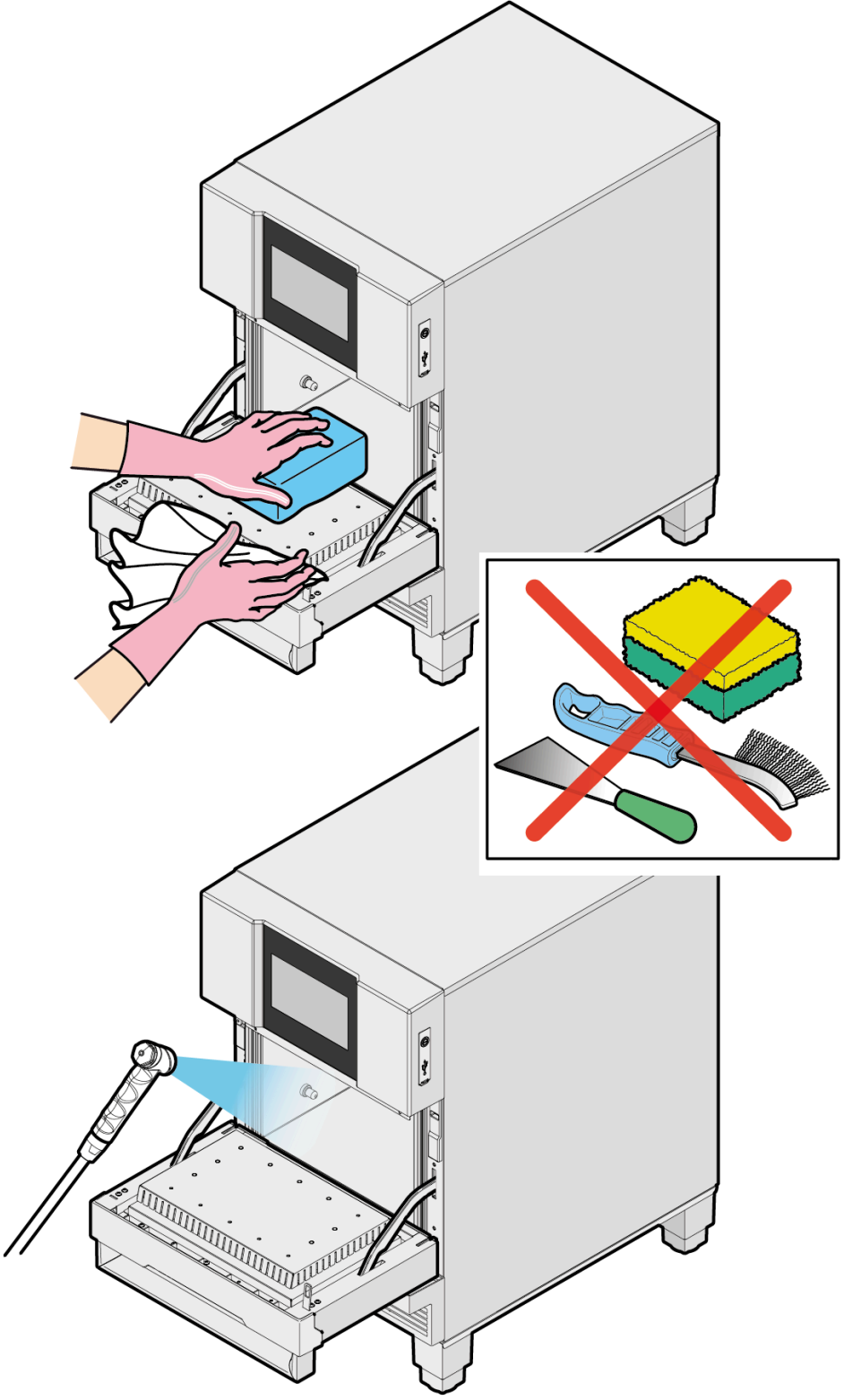

Remove **air filter "D"** from the magnetic fitting and empty the crumbs tray. Apply UNOX's SPRAY&RINSE detergent to the whole filter surface and leave for 10 minutes. Rinse thoroughly and dry with a clean cloth. Put the filter back in place.

⚠ Do not wash the suction filter in the dishwasher.

⚠ The filter must be completely dry before starting the appliance.

SPEED.Compact™ does not work without the suction filter. A sensor detects its presence and warns you to put it back if it is missing.

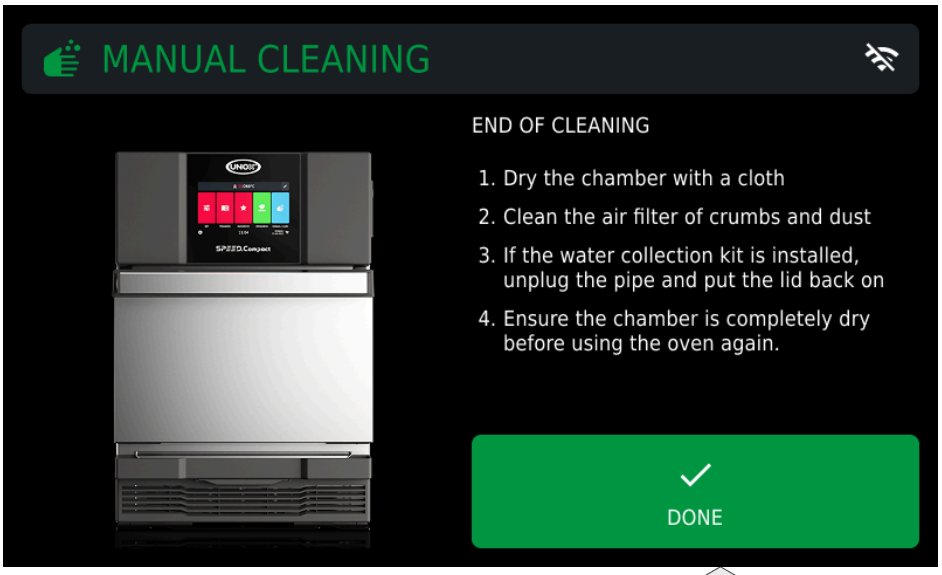

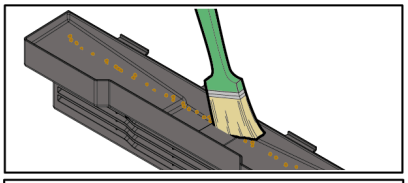

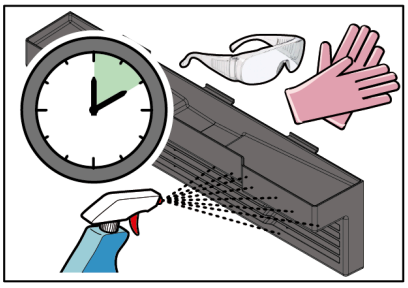

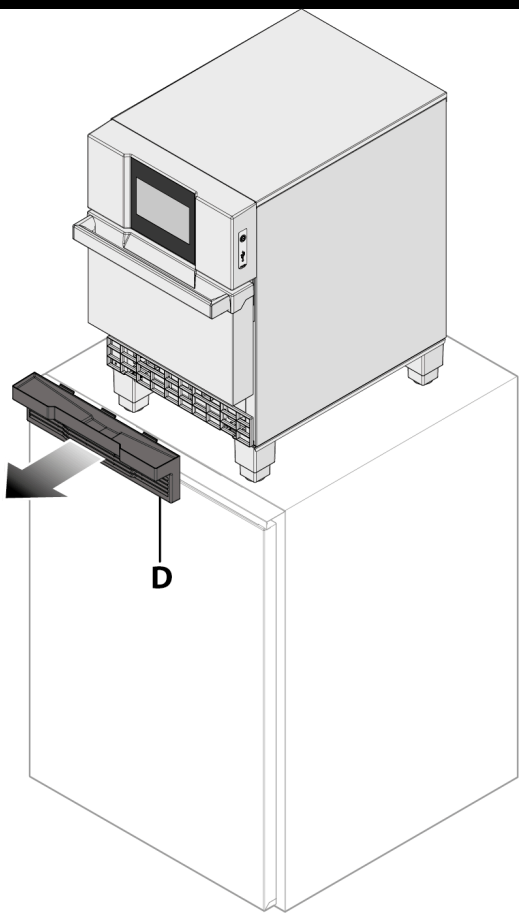

6. Oven cleaning and maintenance

- Safety information for maintaining the appliance
- Cleaning the appliance
- Inactivity
- Disposal and recycling information

Safety information for maintaining the appliance

Any routine maintenance must be performed:

- after disconnecting the appliance from the power supply and waiting for the capacitive components to discharge (approx. a few minutes)
- after waiting for the appliance to cool down fully
- in perfect psychophysical shape
- after putting on suitable personal protective equipment (e.g. heat-resistant rubber gloves, eye protection, dust mask (optional), etc.)

Carefully read the product safety data sheet before handling and using the detergent. Never touch the detergent with bare hands. The detergent must not come into contact with the skin, eyes or mucous membranes. In case of contact with the detergent, follow the instructions on the safety data sheet.

When cleaning any component or accessory **never** use:

- abrasive, pointy or sharp tools or cloths (abrasive sponges, scrapers, steel-bristled brushes, etc.)
- steam or pressurised water jets
- abrasive or powder detergents
- alkaline, aggressive, caustic or corrosive detergents (e.g. hydrochloric/muriatic or sulphuric acid or caustic soda)

These substances may cause permanent damage to the appliance surfaces and catalysts. Never use these substances when cleaning the appliance substructure or the floor under the

appliance. The volatile emissions from these compounds may still cause damage.

Before starting a cleaning cycle, make sure that there are **no** trays in the oven cavity, otherwise the washing is ineffective.

Routine cleaning and maintenance must be done by the user and **not** by children, especially where not supervised by an adult.

Periodically check for rust stains inside the oven cavity: if any are found, contact a service centre urgently because the water is probably damaging the oven; prompt action will extend the lifespan of the equipment.

Cleaning the appliance

Clean the appliance on a daily basis in order to maintain a good level of hygiene and to prevent the stainless steel from corroding or deteriorating.

Cleaning the plate and seal

- Wait for the appliance to cool down fully
- open the oven door and remove plate “A”. Wash the plate/trays using a soft sponge and warm soapy water. Rinse and dry it carefully
- clean seal “B” using a soft cloth dampened in warm soapy water

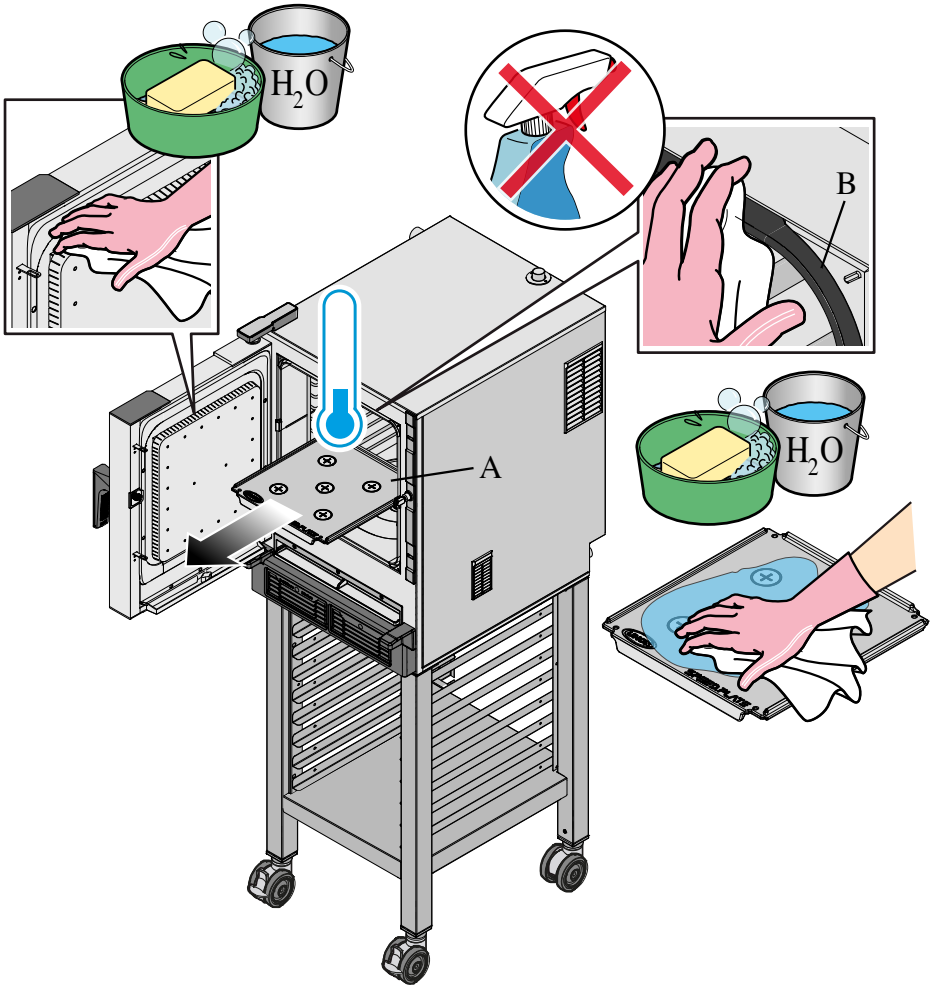

Cleaning the air filter and tray

- Remove air filter “C” from its interlocking housing and apply **UNOX** SPRAY&Rinse to the whole surface
- leave for 10 minutes. Rinse thoroughly and dry with a clean cloth. Do not wash the air filter in the dishwasher
- put the filter back in place. SPEED.Compact™ does not work without the suction filter. A sensor detects its presence and warns you to put it back if it is missing. The filter must be completely dry before starting the appliance
- if necessary, remove any residue from tray “D” and clean it using a soft cloth dampened with warm, soapy water

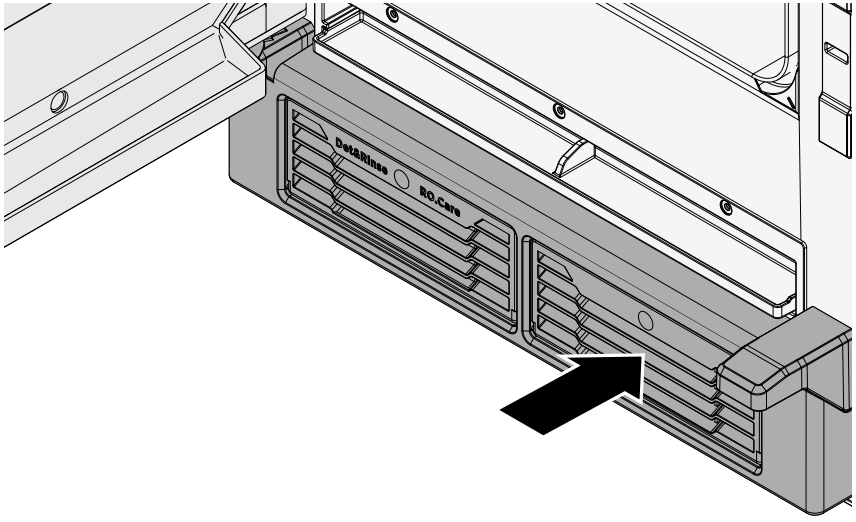
DetaRinse
RO.Care

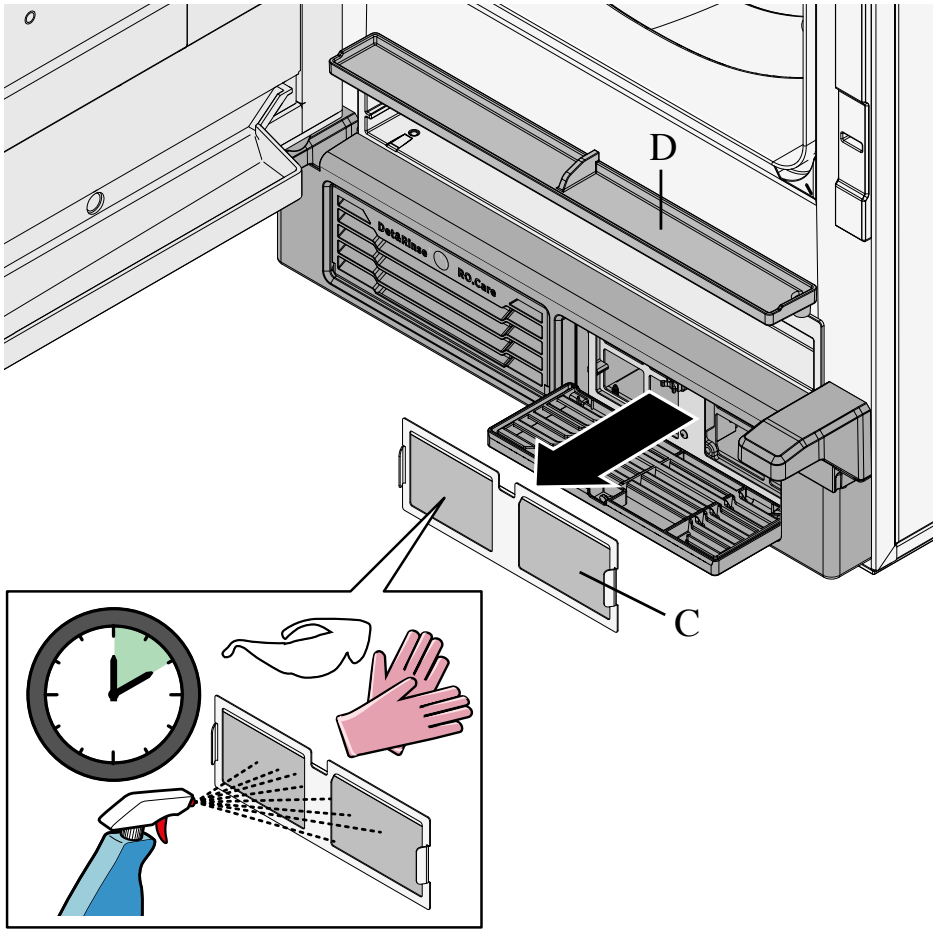
D
DetaRinse
RO.Care
C

Cleaning the external parts

- wait for the appliance to cool down fully
- close the oven door and clean the external steel surfaces with a soft cloth, dampened with soapy water. Take care to avoid seepage under the control panel
- rinse and dry carefully. Wipe steel surfaces regularly with a soft cloth doused in Vaseline oil to protect them

---

Cleaning the control panel

Clean the control panel with a soft cloth and a little detergent designed for cleaning glass. For information on how to clean the panel, follow the detergent manufacturer's instructions.

Cleaning the oven cavity

Manual cleaning

See the manual cleaning procedure.

Inactivity

During periods of inactivity, unplug the appliance from the power and water supplies (if applicable). Rub a soft cloth lightly doused

with Vaseline oil over all stainless steel surfaces and leave the appliance door slightly open.

Before reusing the appliance:

- accurately clean the appliance and accessories. Learn more on cleaning the appliance
- reconnect the appliance to the electrical and water supply (if applicable)
- inspect the appliance before using it again
- restart the appliance for at least 50 minutes without any food inside and with the microwave set to 0%

To ensure the appliance is in perfect condition in terms of use and safety, maintenance and inspections should be performed at least yearly by an authorised service centre.

7. Disposal and recycling

Disposal and recycling information

Pursuant to article 13 of Italian Legislative Decree 49 of 2014 “Implementation of the WEEE Directive 2012/19/EU on waste electrical and electronic equipment”.

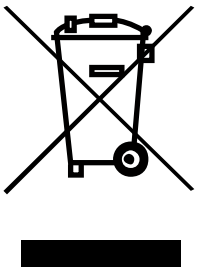

The crossed-out wheelie bin symbol specifies that the product was placed on the market after 13 August 2005 and that at the end of its useful life it should be collected separately and not disposed of with other waste. All appliances are made with recyclable metal materials (stainless steel, iron, aluminium, galvanized steel, copper, etc.) in percentages above 90% by weight. Before disposal, ensure the appliance is unusable by removing the power cable and all compartment or cavity closure devices (where present). At the end of its useful life, the product must be disposed of in such a way as to reduce any negative impact on the environment and make efficient use of available resources. Prefer prevention, preparation for reuse, recycling and reclamation, and remember “the polluter pays”. Please remember that illegal or incorrect disposal of the product incurs penalties, as provided for by current legislation.

Disposal in Italy

In Italy, WEEE appliances must be delivered to:

- recycling centres (also known as waste disposal sites/facilities)
- the dealer from whom the new appliance is purchased, who is required to collect them free of charge (“one-for-one” collection)

Disposal in European Union countries

The EU Directive on WEEE appliances has been implemented differently by each country. Therefore, if you want to dispose of this appliance, we recommend you contact your local authority or dealer for information on the correct disposal method.

---

8. Assistance and support

- What to do if the oven isn’t working
- LONG.Life
- Manufacturer information

What to do if the oven isn’t working

If the oven isn’t working, disconnect the appliance from any electrical and plumbing connections (where applicable) and contact an authorised **UNOX** Technical Assistance centre, providing the following information:

- date of purchase
- any warning messages that appear on the display
- the appliance data on the serial plate.

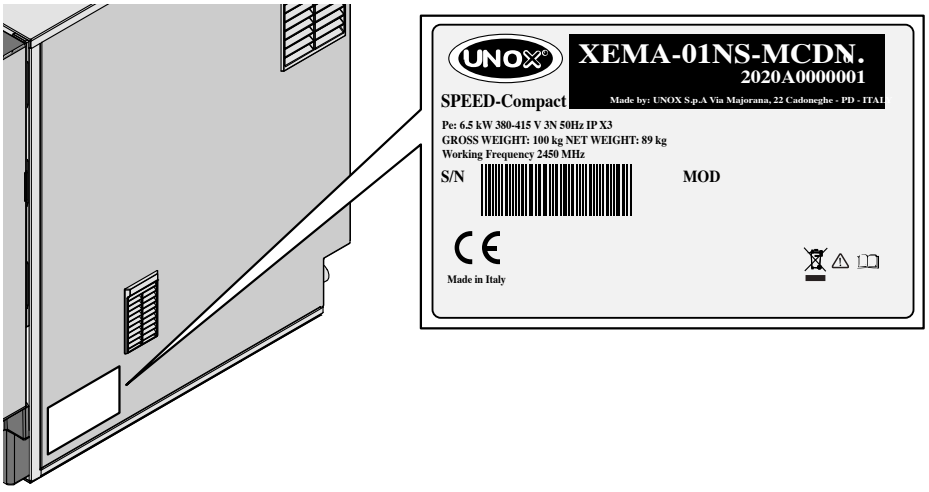

LONG.Life

LONG.Life ensures assistance of our specialised technicians and a 12-month warranty to cover labour and spare parts.

Manufacturer information

UNOX S.p.A. Via E. Majorana, 22
35010 Cadoneghe (PD), Italy
Tel. (+39) 049 8657511
- Fax (+39) 049 8657555
info@unox.com
www.unox.com

9. Copyright

Copyright 2021 **UNOX** S.p.A. All rights reserved. Companies' Register Padua n° 04230750285 - Economic Administrative Index Padua 372835 - Share capital € 5,000,000 fully paid up - VAT No. / Tax Code 04230750285

LI3356A

All the images used are for illustrative purposes. All features indicated in this catalogue are subject to modifications and may be updated without prior notice.