IMC/TEDDY
DECADES OF FINE CRAFTSMANSHIP

AC
Accessory Cabinet

General Information

Project Name: _____

Consultant: _____

Item #: _____

Model #: _____

Quantity: _____



Shown w/
Solid Doors



Custom Model
Shown w/
Glass Doors

Specifications

AC Model Accessory Cabinets is constructed of heavy duty non-magnetic 18GA type 304 stainless steel with a polished finished. Shelves have a solid flanged front and are adjustable. All accessories and options are stainless steel and the unit is NSF approved.

Optional Mirrored Cabinet features a mirrored door and shelves inside for storage. This cabinet can be used at sinks or for accessories in kitchens, bathrooms, schools, etc. Standard cabinet has no mirror.

Product Guide

IMC Accessory Cabinets are designed for sanitary, carefree use.

The cabinet mounts directly on the wall and is particularly suitable to store small accessories and secure items in an easily accessible lockable location.

Mirrored doors allow kitchen personnel to ensure sanitary appearance/attire during food handling. A lock box attachment provides a separate location for Chef's secure accessories.

Rugged stainless steel construction, engineered for high volume use and years of service.

Options

- ☐ **DRL**- Door Lock
- ☐ **ACMRD** - Mirrored Doors
- ☐ **ACS2** - Extra Shelf
- ☐ **ACLU** - Lockable Under Box
- ☐ **KEY** - Replacement Keys
- ☐ Custom Sizes

*See Price List for more options

IMC Teddy •11 Ranick Drive South• Amityville, NY 11701• (800) 221-5644• info@imcteddy.com• www.imcteddy.com

DRAWINGS

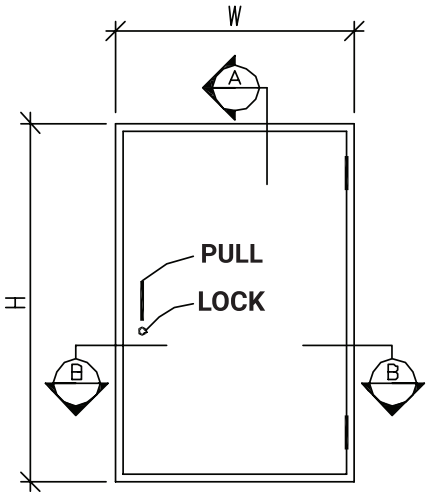

ACCESSORY CABINET

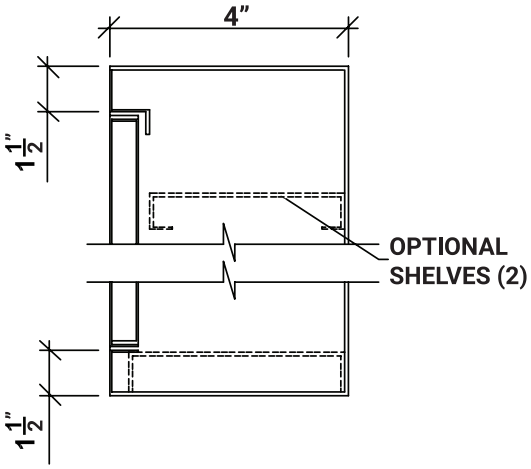

SECTION A

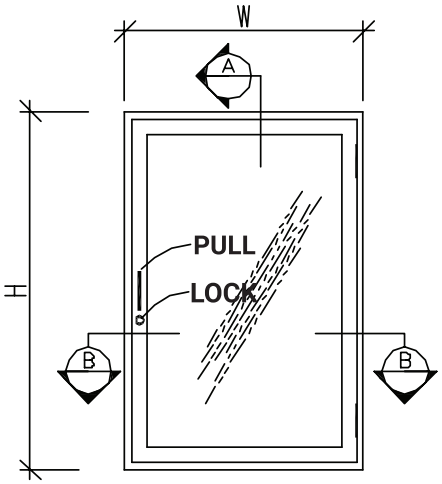

MIRRORED ACCESSORY CABINET

ACCESSORY CABINET STANDARD DEPTH/DESIGN

Model	Size (W x H)	Model	Size (W x H)	Model	Size (W x H)
☐ AC-1826	18" x 26"	☐ AC-2426	24" x 24"	☐ AC-3024	30" x 26"
☐ AC-1836	18" x 36"	☐ AC-2436	24" x 36"	☐ AC-3036	30" x 36"
☐ AC-1842	18" x 42"	☐ AC-2442	24" x 42"	☐ AC-3042	30" x 42"

Specifications subject to change without notice.

AC-90 0524