winholt equipment

Founded in 1946

Project:_____

Items:_____

Quantity: _____

Approval: _____

Date: _____

DOUBLE RACK

Double Rack

Winholt's Double Rack is a space efficient, high-capacity solution built to expand pan storage and improve kitchen mobility. The durable design and versatile pan compatibility make it ideal for fast-paced foodservice environments.

AL-1310-DBL-HD-ST



Features:

- All welded aluminum construction with an aluminum solid top and reinforced uprights
- **Lifetime Warranty Against Rust**
- Holds:

  $^1/_2$, $^1/_3$, and $^2/_3$ size sheet pans

  12"W x 20"L x 6"D steam table pans
- Maneuvers on (4) swivel 5" polyurethane casters

Benefits:

- Doubles your pan capacity without increasing floor space, ideal for high-volume operations.
- Compatible with multiple pan sizes, offering flexibility across prep and service stations.
- Reinforced aluminum build ensures long-term durability and rust resistance, even in demanding environments.
- Smooth-rolling casters provide effortless mobility, allowing staff to reposition the rack with ease.
- Solid top adds usable surface space for staging or temporary storage.

NSF MADE IN USA

Winholt Equipment I 20 Crossways Park North, Suite 205 I Woodbury, New York 11797
Pennsylvania I Texas I California
800.444.3595 I sales@winholt.com I www.winholt.com

DOUBLE RACK

winholt equipment

Founded in 1946

Double Rack

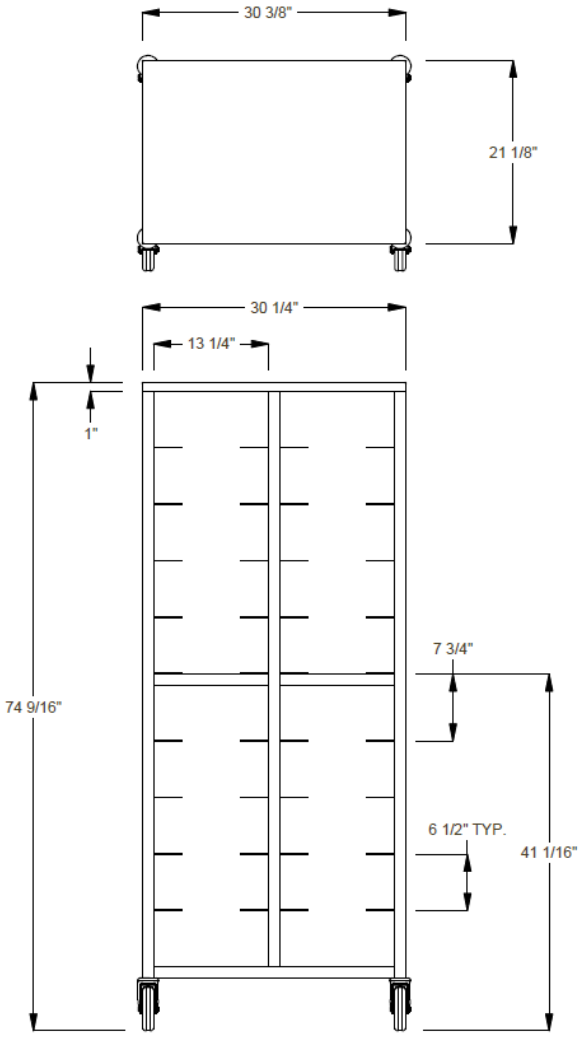

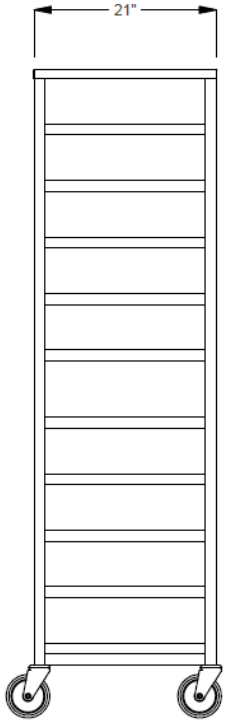

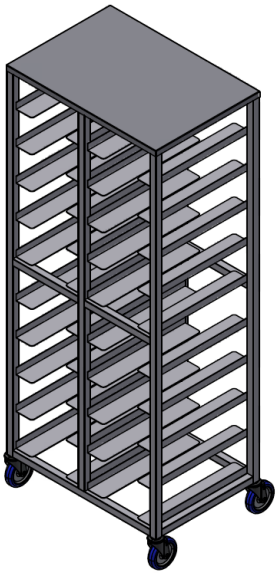

Model Number	Order #	Overall Dimensions			# of Shelves	Approx. Ship Wt
		Width	Length	Height		
		(in)	(in)	(in)		(lb)
AL-1310-DBL-HD-ST	1142812	$30^{2}/_{5}$	$21^{1}/_{8}$	$74^{3}/_{5}$	20	48

Freight Class: 250

We Care
For Our:
Customers • Associates
Suppliers • Community

In line with our policy to continually improve our products, Winholt reserves the right to change materials and specifications without notice.