IMC/TEDDY
DECADES OF FINE CRAFTSMANSHIP

BNC
Chef's Bench

General Information

Project Name: _____

Consultant: _____

Item #: _____

Model #: _____

Quantity: _____



Model #BNC-1524

Specifications

BNC Model Chef's Bench is constructed of 14GA Type 304 stainless steel with reinforcement channels added for stability.

The 16GA S/S 1⅝" legs are fully welded to channels & come with S/S flanged feet.

16GA S/S 1¼" cross bracing keeps the unit stable & strong.

Bullnose seat makes unit smooth & comfortable for sitting.

Overall size of unit is 15"W x 24"L x 18"H. Benches 72" & longer provided with extra legs. Custom sizes are available.

Benches are polished smooth to a #4 brushed satin finish.

Product Guide

Stainless steel chef's bench are designed to provide you a stable & supportive rest area in your commercial facility.

The decorative & functional bench is a welcome piece in your facility to bring a modern, sleek aesthetic.

Durable & easy to clean, stainless steel benches are a stylish choice in seating.

Options

- Custom Sizes Available
- **GA-12** - 12GA Upgrade
- **BACR** - Back Rest

*See Price List for more options

BNC-20 0524

BNC
Chef's Bench

DRAWINGS

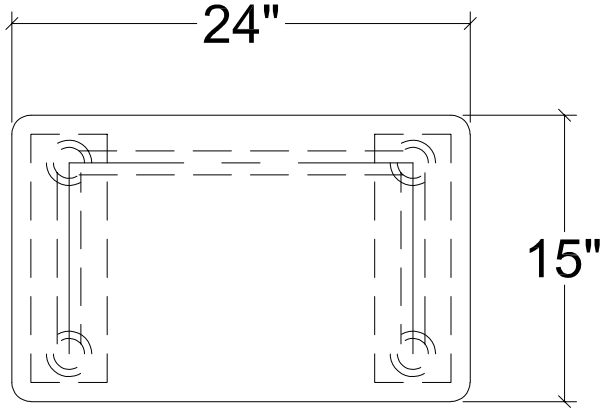

A PLAN

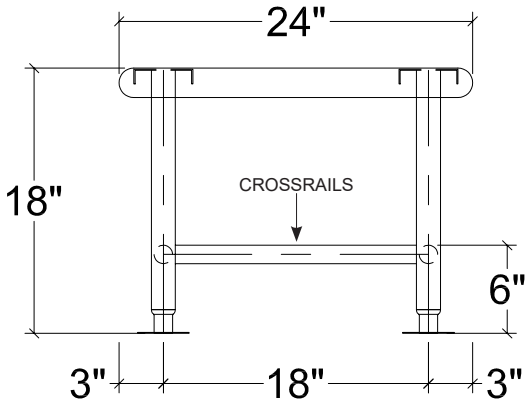

A ELEVATION

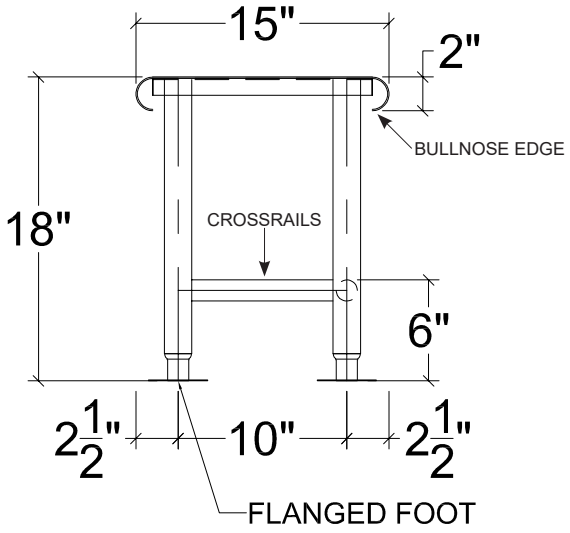

SECTION

CHEF'S BENCH

Model	Size (W x L x H)	Seats
☐ BNC-1524	15" x 24" x 18"	1
☐ BNC-1548	15" x 48" x 18"	2
☐ BNC-1554	15" x 54" x 18"	2
☐ BNC-1560	15" x 60" x 18"	2
☐ BNC-1572	15" x 72" x 18"	3
☐ BNC-1584	15" x 84" x 18"	3
☐ BNC-1596	15" x 96" x 18"	4
☐ BNC-15120	15" x 120" x 18"	5
☐ BNC-15144	15" x 144" x 18"	6

Specifications subject to change without notice.

BNC-20 0524