IMC/TEDDY
DECADES OF FINE CRAFTSMANSHIP

CCA
Cashier Counter

General Information

Project Name: _____

Consultant: _____

Item #: _____

Model #: _____

Quantity: _____



Model CCA-L
Shown w/ Open Base

Specifications

Top: 16GA Type 304 stainless steel with 2" channel edge, all corners welded, ground and polished. S/S channel bracing provided as necessary.
Frame: 14GA S/S multi-formed, fully welded vertical corner uprights.
Apron: 18GA S/S, 10" apron welded to framework.
Cash Drawer: Counter has cash drawer S/S front, compartments, tray cylinder lock and a pull handle.
Casters: 5" Heavy Duty ball bearing swivel casters, (2) with brakes.
Interlocking Device: As required, quick release latches are provided to join units together.
Outlet: 120 Volt outlet is provided next to cash drawer, includes a 5' long three wire cord and plug.

Product Guide

Modular Cashier Counters are convenient and easy to use. These sturdy units are designed for long lasting service.

Units are provided with interlocking devices for quick and easy assembly and disconnecting.

Options

- ☐ Tray Slide (Solid) - 12" Wide
- ☐ Tray Slide (Three Bar) - 12" Wide
- ☐ Display Case (2-Tier)
- ☐ Protector Case
- ☐ Single Service Sneeze Guards
- ☐ Double Service Sneeze Guard
- ☐ Fluorescent Light
- ☐ Work Shelf
- ☐ Work Shelf w/ Poly Top
- ☐ Plate Shelf
- ☐ Full Front Panel (Laminate)
- ☐ Full End Panel (Laminate)
- ☐ Intermediate Undershelf
- ☐ Convenience Outlets - ____ (ea.)
- ☐ 14GA Top Upgrade
- ☐ Backsplash (6" High)
- ☐ Return Splash (6" High R/L)
- ☐ Laminate Doors
- ☐ Kick Base - Stainless Steel
- ☐ Correctional Package
- ☐ Sink - specify size: _____
- ☐ Lever Drain
- ☐ Legs w/ Bullet Feet
- ☐ Doors - Stainless Steel
- ☐ Lever Drain w/ Overflow
- ☐ Receptacle Bracket - ____ (ea.)
- ☐ Drawer(s) - _____ (ea.)
- ☐ Sound Deadended Top
- ☐ Infrared Heat Lamp

*See Price List for more options

CCA-70 0524

IMC/TEDDY
DECADES OF FINE CRAFTSMANSHIP

CCA
Cashier Counter

DRAWINGS

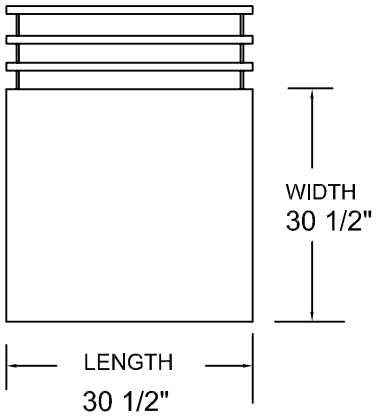

PLAN

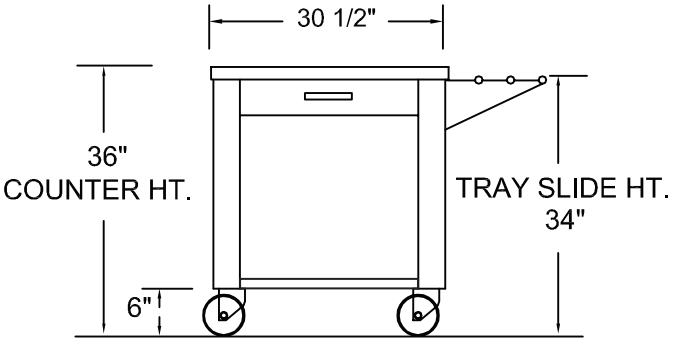

SECTION

CASHIER COUNTER

Model	Size (W x L x H)	Description
☐ CCA	30½" x 30½" x 36"	No Tray Slide
☐ CCA-L	30½" x 42½" x 36"	Left Tray Slide
☐ CCA-R	30½" x 42½" x 36"	Right Tray Slide
☐ CCA-C	42½" x 30½" x 36"	Center Tray Slide

RECOMMENDED COUNTER HEIGHT FOR SCHOOLS

- ☐ HIGH SCHOOL - STANDARD HEIGHT: 36" COUNTER HEIGHT - 34" TRAY SLIDE HEIGHT
- ☐ INTERMEDIATE SCHOOL: 34" COUNTER HEIGHT - 32" TRAY SLIDE HEIGHT
- ☐ ELEMENTARY SCHOOL: 32" COUNTER HEIGHT - 30" TRAY SLIDE HEIGHT

Specifications subject to change without notice.

IMC Teddy •11 Ranick Drive South• Amityville, NY 11701• (800) 221-5644• info@imcteddy.com• www.imcteddy.com