IMC/TEDDY
DECADES OF FINE CRAFTSMANSHIP

CH
Chemgrate Grating

General Information

Project Name: _____

Consultant: _____

Item #: _____

Model #: _____

Quantity: _____

Open Sides Vary

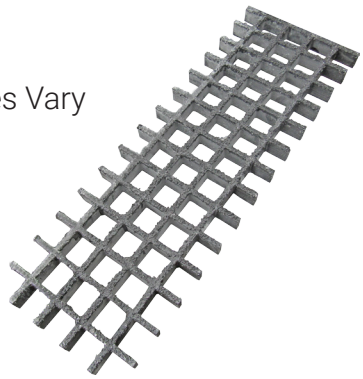

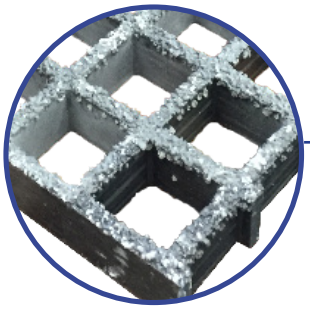

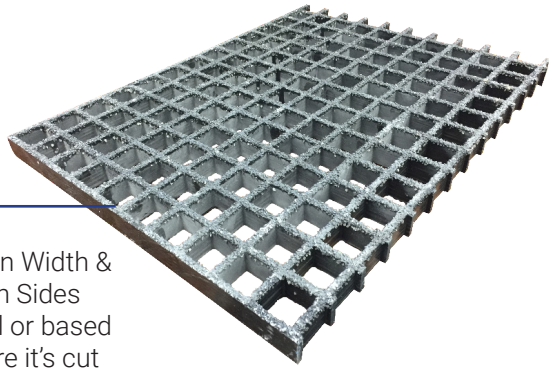

Closed on Width & Length Sides (Optional or based on where it's cut from full sheet)

PROUDLY MADE IN THE USA

Specifications

CH Model Grating is constructed of fiberglass, with molded squares & an SGF Polyester Resin.

The grid size is 1½" x 1½" square with a 1" grid height. Top grid thickness is ¼", while the bottom grid thickness is $^{13}/_{64}$".

CH has a grit surface & features a 70% open area.

Gratings are sized up to 20" long sections.

Product Guide

CH Chemgrate Grating is an ideal substitute for steel or aluminum gratings. Long life, inherent in fiberglass (often outlasts steel 20-to-1), makes CH a problem solving material where frequent replacement costs are unacceptable.

Fiberglass Gratings are corrosion resistant, structurally strong, fire retardant, lightweight, anti-slip surface & low maintenance.

Options

- ☐ Custom Sizes
- ☐ Change Color to Yellow/Green (Same Price as Gray)
- ☐ Uniform Cut (Closed Ends)
- ☐ ¾" Top Grid ADA Compliant

*See Price List for more options

CH-30 0524

CH
Chemgrate Grating

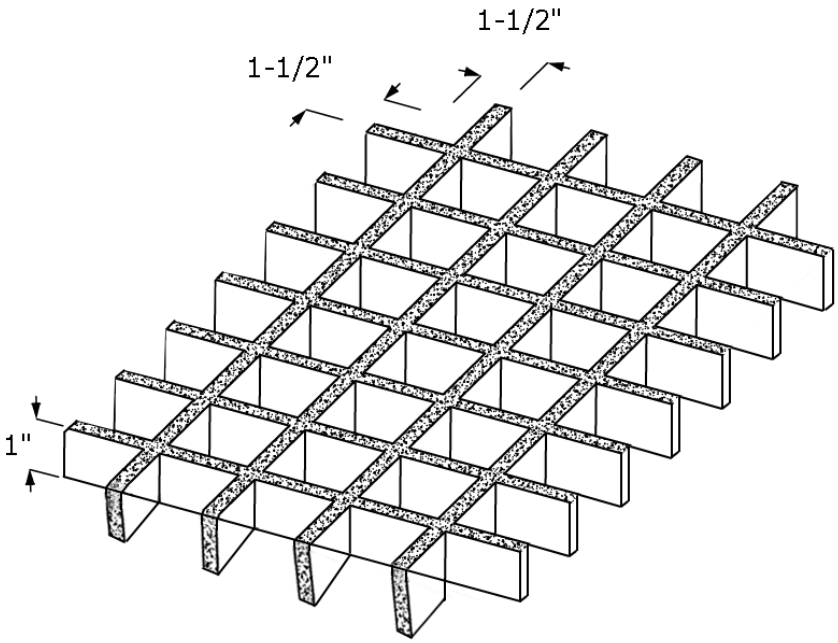

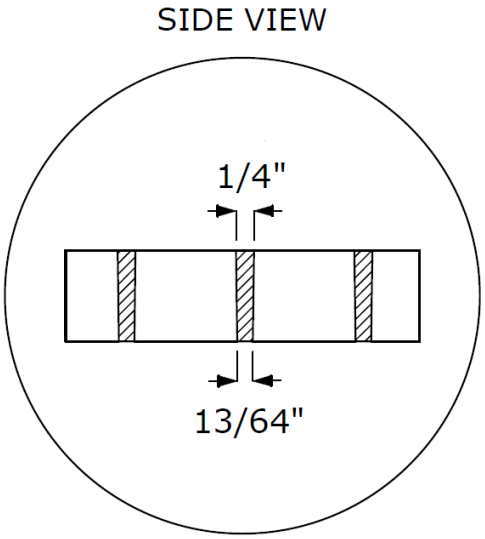

CHEMGRATE GRATING, STANDARD DESIGN

Model	Size (W x L)	Model	Size (W x L)	Model	Size (W x L)	Model	Size (W x L)
☐ CH-1224	12” x 24”	☐ CH-1824	18” x 24”	☐ CH-2424	24” x 24”	☐ CH-3024	30” x 24”
☐ CH-1236	12” x 36”	☐ CH-1836	18” x 36”	☐ CH-2436	24” x 36”	☐ CH-3036	30” x 36”
☐ CH-1248	12” x 48”	☐ CH-1848	18” x 48”	☐ CH-2448	24” x 48”	☐ CH-3048	30” x 48”
☐ CH-1260	12” x 60”	☐ CH-1860	18” x 60”	☐ CH-2460	24” x 60”	☐ CH-3060	30” x 60”
☐ CH-1272	12” x 72”	☐ CH-1872	18” x 72”	☐ CH-2472	24” x 72”	☐ CH-3072	30” x 72”
☐ CH-1284	12” x 84”	☐ CH-1884	18” x 84”	☐ CH-2484	24” x 84”	☐ CH-3084	30” x 84”
☐ CH-1296	12” x 96”	☐ CH-1896	18” x 96”	☐ CH-2496	24” x 96”	☐ CH-3096	30” x 96”
☐ CH-12108	12” x 108”	☐ CH-18108	18” x 108”	☐ CH-24108	24” x 108”	☐ CH-30108	30” x 108”
☐ CH-12120	12” x 120”	☐ CH-18120	18” x 120”	☐ CH-24120	24” x 120”	☐ CH-30120	30” x 120”

☐ Custom Size: CH-_____

Specifications subject to change without notice.

CH-30 0524