COOKLINE

USER MANUAL

FULL SIZE GAS CONVECTION OVEN

MODEL: CV100

USR BRANDS INC.

Phone: 800-764-1172 | www.usrbrands.com | sales@usrbrands.com

USR BRANDS® RESERVES THE RIGHT TO CHANGE SPECIFICATIONS WITHOUT NOTICE

Read this manual before operation

⚠ This equipment requires regular cleaning. Neglect due to poor maintenance is not covered under your product warranty. Grease and/or debris buildup will affect performance and create a fire risk. Please care for your new equipment.

If you smell gas, follow the instructions provided by the gas supplier.

Do not try to light the burner; do not use a telephone within close proximity.

FOR YOUR SAFETY

Do not store or use gasoline or other flammable vapors or liquids in the vicinity of this or any other equipment.

⚠ WARNING Improper installation, adjustment, alteration, service or maintenance can cause property damage, injury or death.Read this installation,operating and maintenance instructions thoroughly before installing or servicing this equipment.

⚠ WARNING Electrical Grounding Instructions :This appliance is equipped with a three-prong (grounding) plug for your protection against shock hazard and should be plugged directly into a properly grounded three-prong receptacle. Do not cut or remove the grounding prong from this plug.

When installed the appliance, must be electrically grounded in accordance with local codes.

⚠ WARNING Please kindly place the number of racks/pans according to the food.

Dear Customer & User,

Thank you for purchasing our appliance. Before use and operation, please read and familiarize yourself with the following operating and safety instructions. SAVE THESE INSTRUCTIONS FOR FUTURE REFERENCE. Save the original box and packaging. Use this packaging to ship the equipment if repairs are needed.

This manual contains important information, please read the manual thoroughly prior to equipment set-up, operation and maintenance. Failure to comply with regular maintenance guidelines outlined in this manual may void the warranty.

The user's manual should be always available for operation. So make sure this manual book is properly placed. We have the full authority to reserve the further technical changes of the device, in the scope of further performance improvement characteristic development.

WARNINGS

- Do not store or use gasoline or other flammable vapors or liquids in the vicinity of this or any other equipment
- Improper installation, adjustment, alteration, service or maintenance can cause property damage, injury or death
- Read the installation and maintenance instructions thoroughly before installing or servicing this equipment
- Have the equipment installed by a qualified installer in accordance with all federal, state and local codes
- Do not install or use without all 4 legs
- This equipment is for use in non-combustible locations only
- Do not obstruct the flow of combustion and ventilation air
- Do not spray controls or the outside of the equipment with liquids or cleaning agents
- Allow for hot parts to cool before cleaning or moving
- This equipment should only be used in a fl at, level position
- Do not operate unattended
- Any loose dirt or metal particles that are allowed to enter the gas lines on this equipment will damage the valve and affect its operation
- If you smell gas, follow the instructions provided by the gas supplier. Do not touch any electrical switch; do not try to light the burner; do not use a telephone within close proximity.

Product parameters table

Model No.	Dimension(inch)	Gas type	Rated power (BTU/Hr.)
CV100	38.11*41.65*56.46	NAT	60000
CV100	38.11*41.65*56.46	Propane	60000

Product Structure

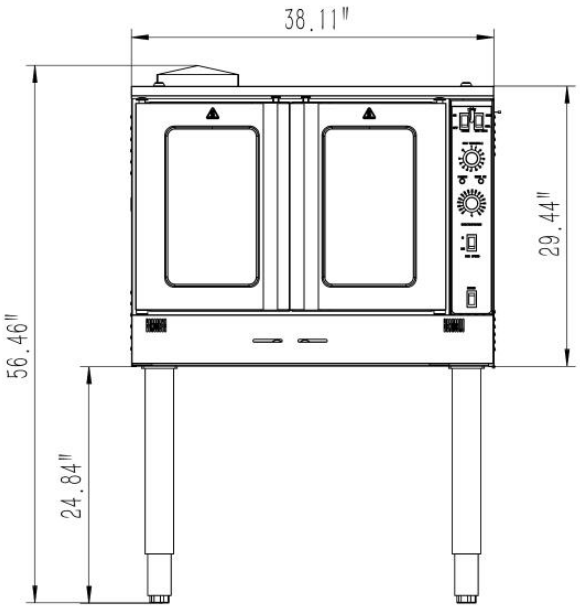

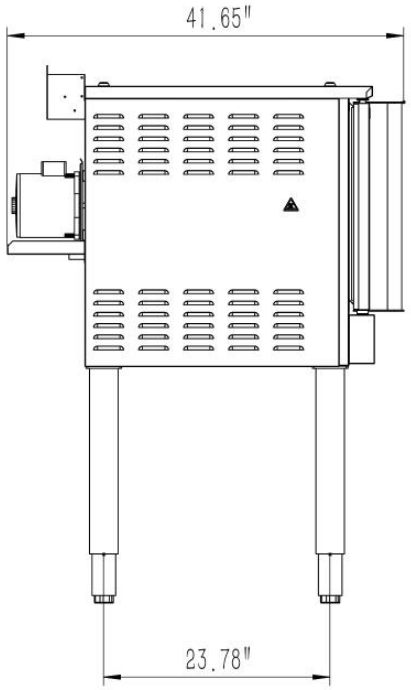

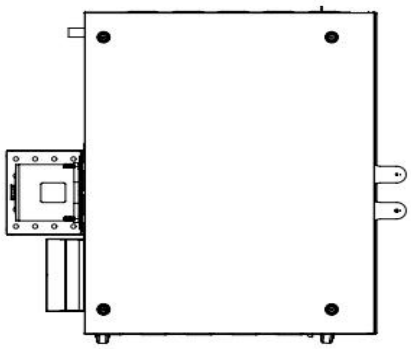

Double deck oven

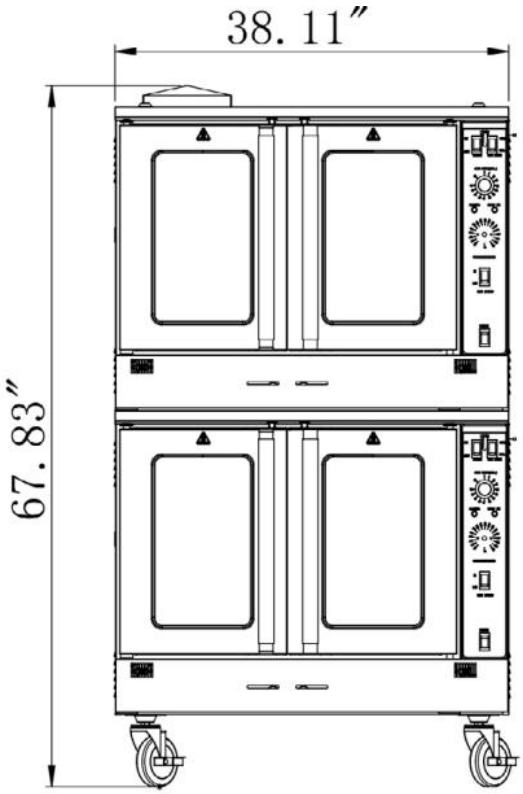

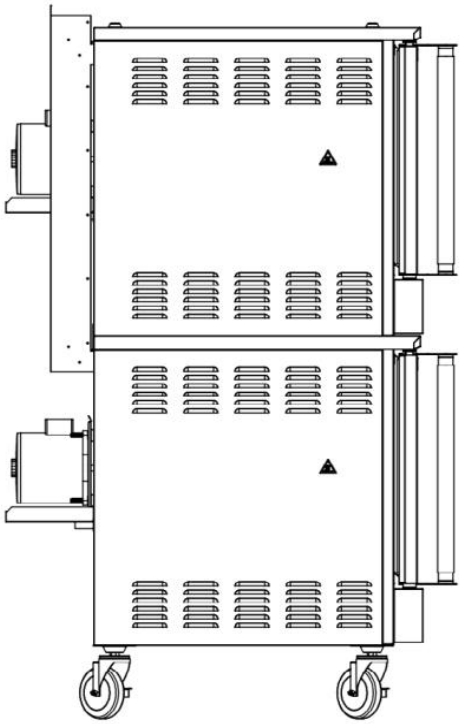

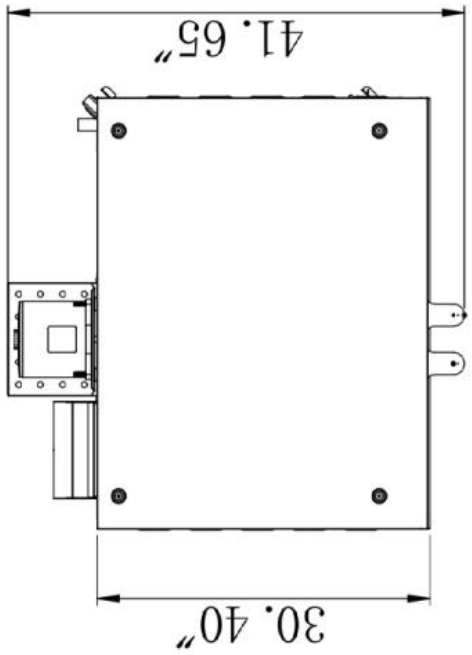

Stacking oven instruction:

Requires two ovens and stacking kit

Note:We recommended that the stacking is performed by authorized service agent or installer.

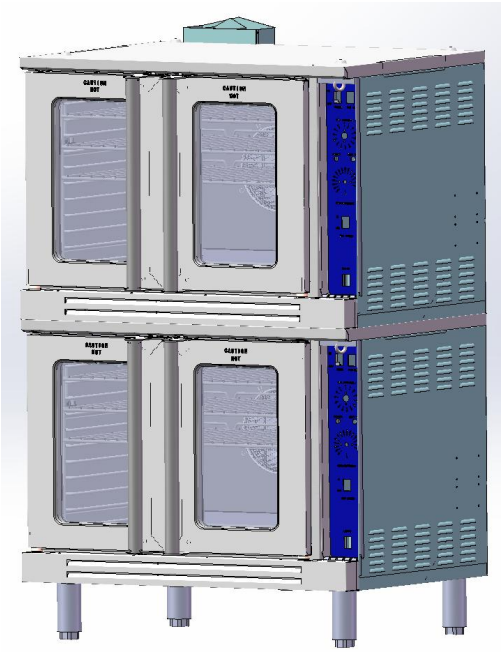

Step1:

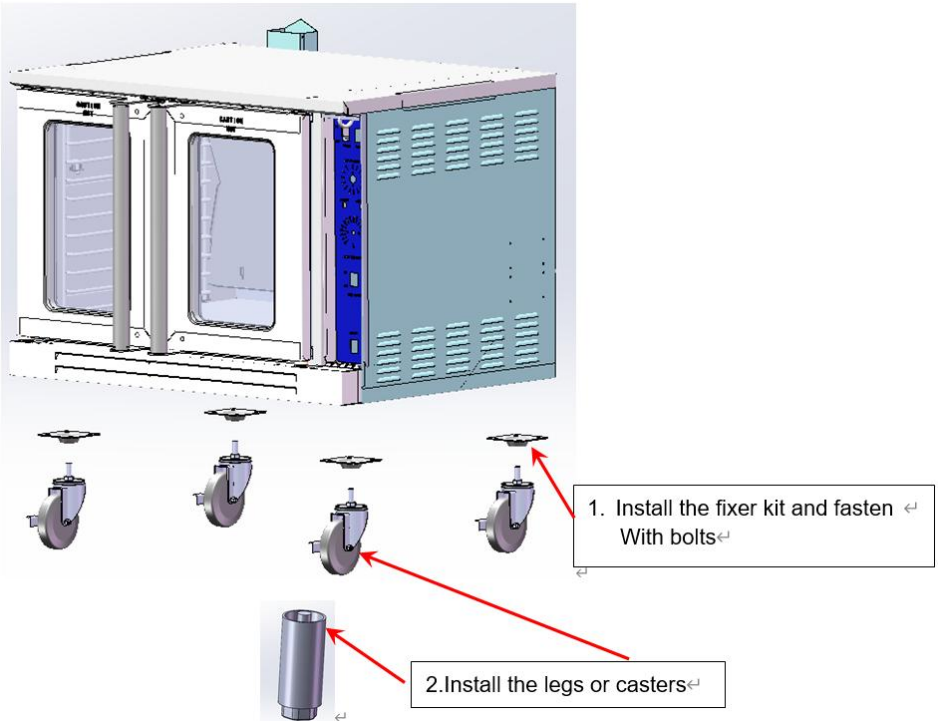

Step2:

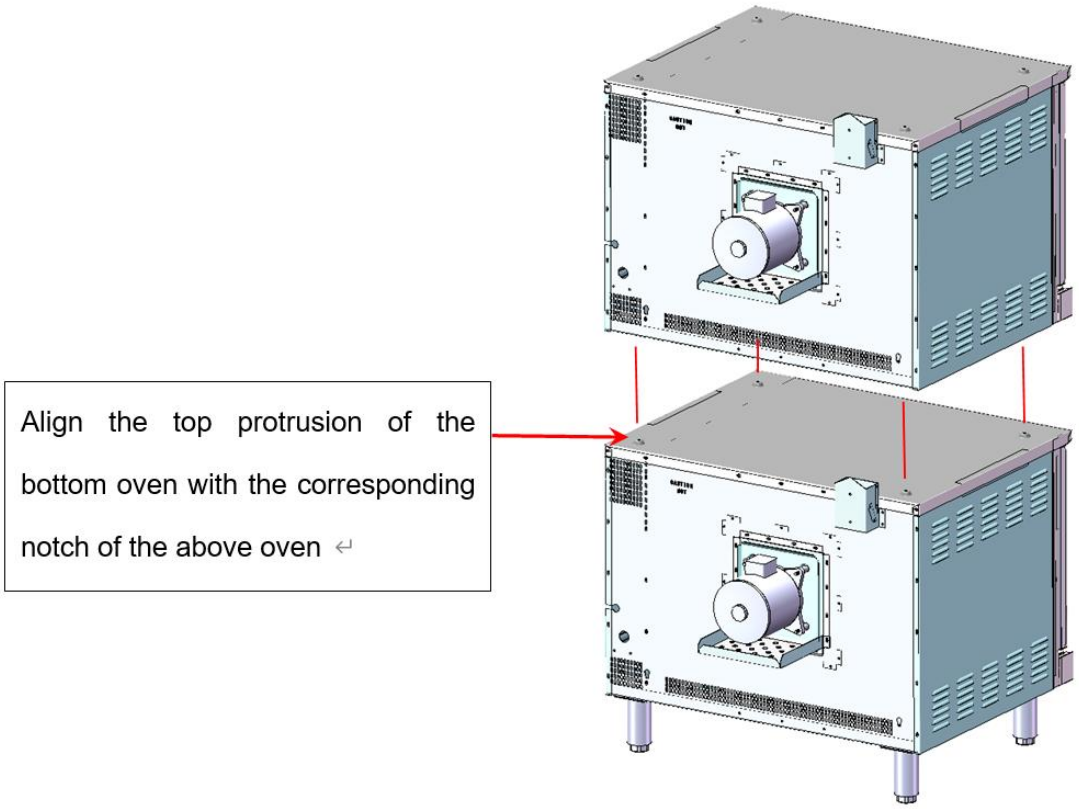
Align the top protrusion of the bottom oven with the corresponding notch of the above oven

Step3:

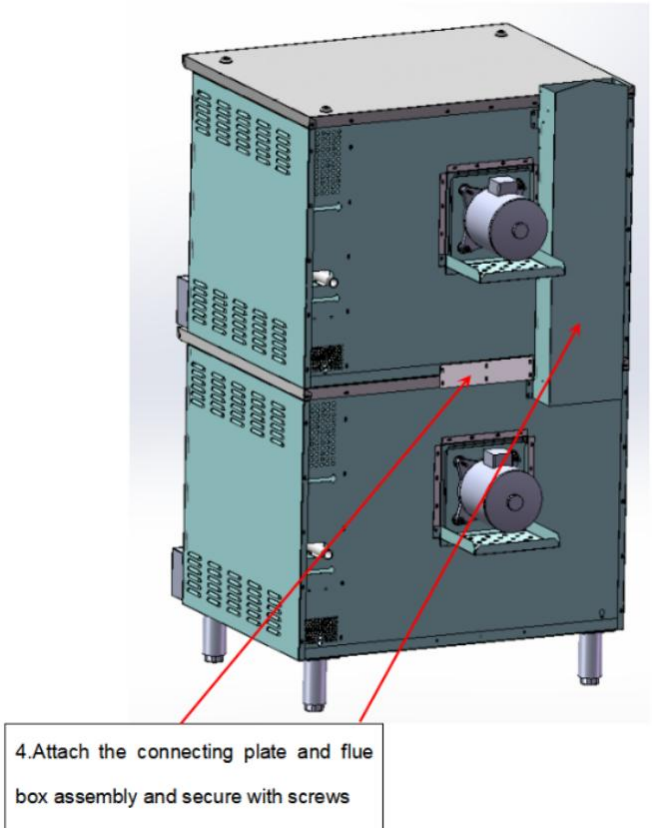
4.Attach the connecting plate and flue box assembly and secure with screws

INSTALLATIONS

TO INSTALL:

1. Remove unit from box and make sure all plastic, tape and packing materials are removed.

2. Place the unit on a flat, secure surface

3. Install the leg onto the unit and make sure the unit is level

4. Check to make sure the outlet of the correct voltage for this item (120V) and gas connection is near. Do not use an extension cord, this item must be plugged directly into an outlet.

5. Unit should be placed under a ventilation hood and their should be at least 2” of space between the back of the oven and the wall. This will ensure proper airflow

The installation of this equipment must conform with local codes, or with the National Gas Code, ANSIZ223.1/NFPA 54, or the Natural Gas and Propane Installation Code, CSA B149.1, as applicable.

The equipment and its individual shutoff valve must be disconnected from the gas supply piping system during any pressure testing of that system at test pressures in excess of ½ psi (3.5 kPa).

The equipment must be isolated from the gas supply piping system by closing its individual manual shutoff valve during any pressure testing of the gas supply piping system at test pressures equal to or less then ½ psi (3.5 kPa).

Clearance and positioning around the equipment:

This equipment must be installed adjacent to non-combustible surfaces only with a minimum spacing of 6”from all sides. This equipment must be a distance of 6” from other equipment. The equipment must have the legs installed and could be placed on a combustible surface.

Air Supply and ventilation:

The area in front and around the equipment must be kept clear to avoid any obstruction of the flow of combustion and ventilation air.

Adequate clearance must be maintained at all times in front of and at the sides of the equipment for servicing and proper ventilation.

External step down pressure regulator:

All liquid propane oven must have a pressure step-down regulator on the incoming gas line for safe and efficient operation.

Prior to connect the regulator , check the incoming line pressure. The regulator can only withstand a maximum pressure of 1/2PSI .If the line pressure is beyond this limit ,a step down regulator will be required .The arrow on the bottom shows gas flow direction and should point downstream to the equipment.

OPERATING INSTRUCTIONS AND CONTROLS：

Control panel features

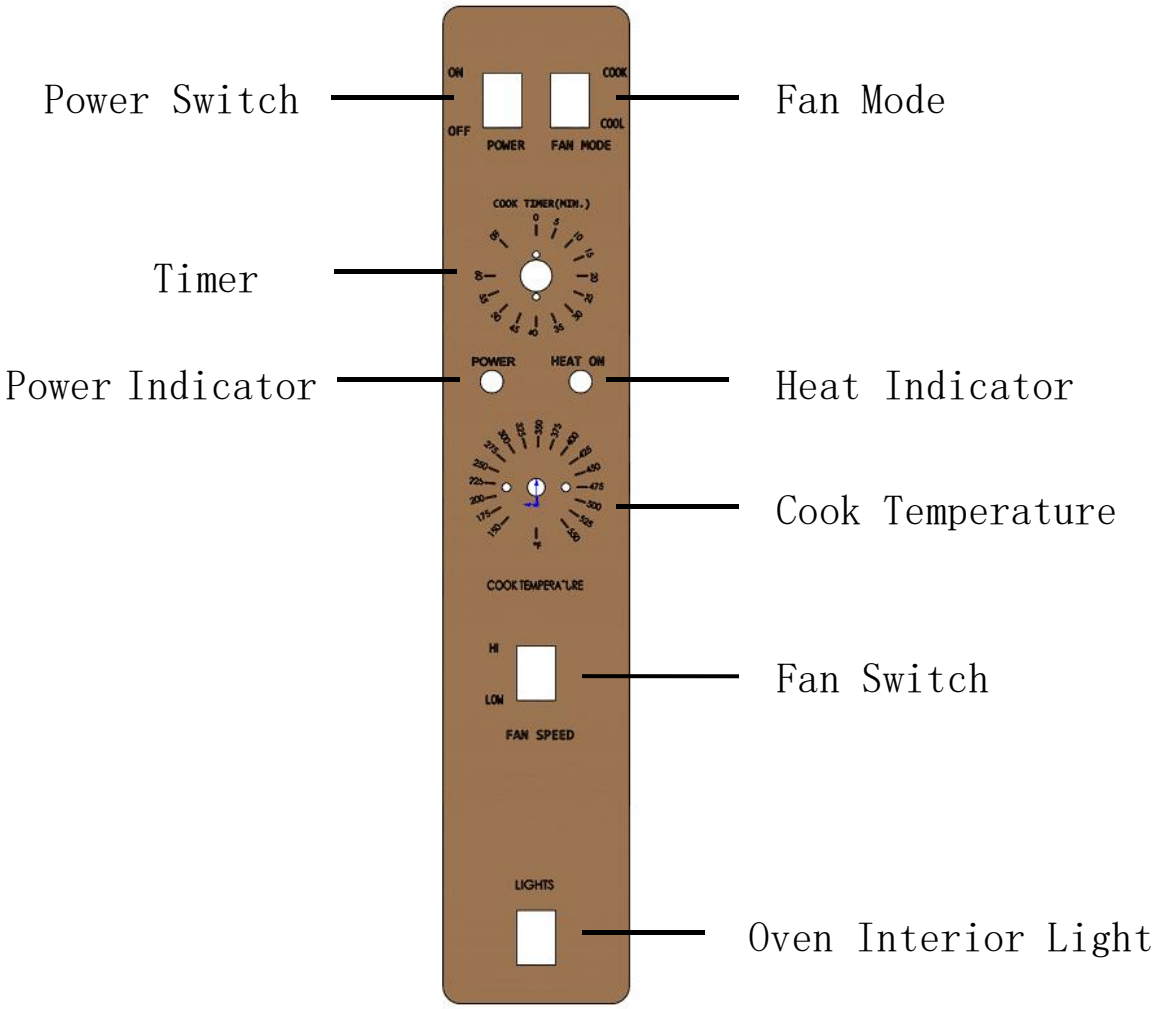

To Use ：

1.Turn the oven ON by using the power switch at the top of the control panel.

2. Select the desired fan speed using the fan speed switch, recommend to use low speed to start the oven for the first using the day and cooking with high speed.

3. Switch the Fan Mode to Cook. In cook mode, the fan will run continuously when the oven doors are closed (The fan does not cycle on and off with the burners). If the switch is set to COOL, the fan will continue to run even with the doors open.

4. Set the cooking temperature by turning the Cook Temperature Control until the indicator mark on the knob is pointed to the desired cooking temperature. The HEAT ON indicator will light when the burners are on and will remain on while the oven pre-heats.

5. The HEAT ON indicator will turn on and the oven will be heated, wait until the HEAT ON indicator turn off then the oven will have reached the set cooking temperature.

6. Set the fan mode to cook mode then open the oven doors and load the product into the oven. Once product is set, close oven doors to start cooking.

Note: Please select Hi fan speed to cook ,which will cook faster and uniformity.

7. To set the Timer turn the Cook Timer until the indicator mark points to the desired cooking time. The timer goes from 0-60 minutes. A buzzer will buzzing once the timer hits 0. The buzzer will shut off after turn to OFF position. The timer does not control the oven. The timer will continue to run when the oven doors are open.

8. When the food is done cooking, you can quickly cool it down by opening the oven doors and switching the fan mode to COOL with HI speed.

9. When you are done cooking, turn the oven off by turning the temperature to the lowest setting and switching the Power Switch to OFF.

CLEANING & MAINTENANCE

To maintain cleanliness and increase service life, this item should be cleaned daily. Do not immerse the unit in water or any other liquid, if liquid enters the electrical compartment it may cause a short circuit or electrical shock.

1. Before cleaning or attempting to move this item always turn off, unplug and let cool.

2. Wipe the entire unit with a clean soft cloth until it is completely dry.

3. To avoid damage to the unit, do not use abrasive cleaners or scouring pads.

4. If soap or chemical cleaners are used, be sure they are completely rinsed away with clean water immediately after cleaning. Chemical residue could damage or corrode the surfaces of the unit.

To avoid serious injury or damage, never attempt to repair or replace a damaged power cord yourself .Contact a professional repair service.

Failure Analysis & Trouble Shooting:

Problem	Possible Causes	Solution
No Heat	Ignitor defective	Call authorized service center
No Heat	Power switch on control panel is off	Set the control panel to COOK
No Heat	Doors are open	Close doors
No Heat	Door micro switch defective	Call authorized service center
No Heat	Gas valve to oven may be in the cleared position	Turn gas valve on
Oven has not reached proper temperature	The oven has not reached pre-heat temperature	Wait for oven to reach pre-heat temperature
Oven has not reached proper temperature	Internal problem with main temperature control	Call authorized service center
Convection fan does not run	Oven has no electrical power	Check electrical supply
Convection fan does not run	Circuit breaker tripped	Reset the breaker
Convection fan does not run	Doors are open	Close doors
Convection fan does not run	Door Micro-switch defective	Call authorized service center

Helpful Hints:

Problem	Possible Causes	Solution
Food browns unevenly	Improper heating temperature	Pre-heat until desired temperature is reached
Food browns unevenly	Baking pan dark or glass	Lower oven temperature by 25° F
Food dries before browning	Oven temperature too high	Lower oven temperature

Wiring diagram for the gas convection oven

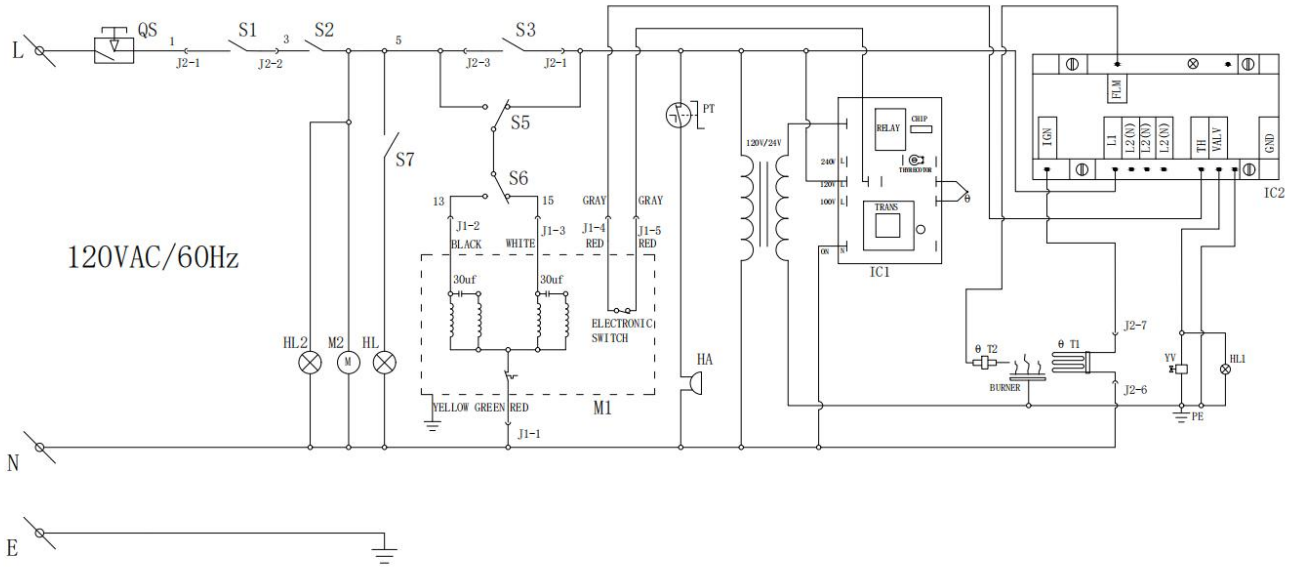

Explosive Drawing

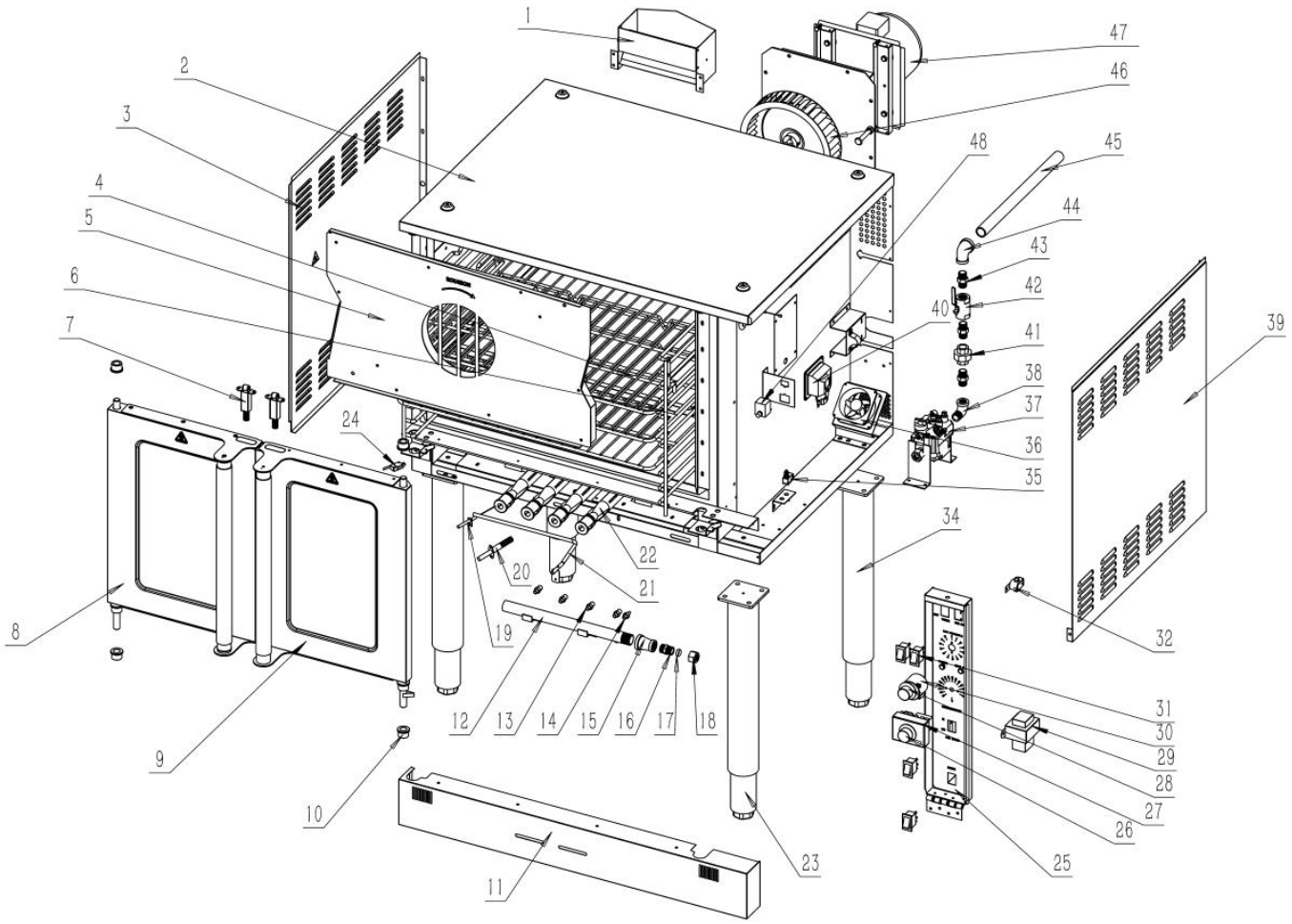

Part List

Item	P/N	Part Name	Qty
1	20144001005	Chimney Assembly	1
2	20144001004	Top Plate Assembly	1
3	20244001065	Side Panel,Right	1
4	30211000052	Rack	3
5	20144001007	Hot air compartment assembly	1
6	30204000019	Rack Support	2
7	20144001014	Door stopper assembly	2
8	20144001012	Door Assembly,Left	1
9	20144001009	Door Assembly,Right	1
10	30220000023	Door shaft bush	6
11	20244001067	Front lower Panel	1
12	30218000069	manifold	1
13	30215000059	Orifice,Natural Gas	4
	30215000060	Orifice,Propane	4
14	30215000061	flash tube orifice,Natural Gas	1
	30215000062	flash tube orifice,Propane	1

15	30225000022	tube connector	1
16	30214000033	Brass fitting	2
17	30214000031	hoop	2
18	30214000032	Nut	2
19	30219000015	flame Sensor	1
20	30219000013	Ignitor	1
21	30206000058	flash tube	1
22	30213000006	Burner	4
23	30209000009	leg	4
24	30108000014	Door micro Switch	1
25	30312000112	Red Facial Panel	1
26	30111000032	Thermostat Knob	1
27	30103000016	Thermostat	1
28	30111000031	knob,timer	1
29	30112000004	Transformer	1
30	30112000003	Timer	1
31	30108000013	Switch	4
32	30110000004	Buzzer	1
34	30209000021	leg	4
35	30108000015	micro switch,electrical box	1
36	30115001005	Cooling Fan	1

37	30205000015	Safety Valve, Natural Gas	1
	30205000017	Safety Valve, Propane	1
38	30225000005	elbow	1
39	20244001066	Side Panel,Right	1
40	30219000016	oven interior lamp	1
41	30225000008	junction connector	1
42	30205000014	manual brass Valve	1
43	30225000007	1/2 straight tube	3
44	30225000006	elbow,1/2*3/4	1
45	30218000068	Inlet Gas Pipe	1
46	30219000012	Turbo Fan	1
47	30101001013	Motor	1
48	30117000014	95° C Hi-Limit	1