IMC/TEDDY
DECADES OF FINE CRAFTSMANSHIP

DL20-1
Utility Sink & Can Washer

General Information

Project Name: _____

Consultant: _____

Item #: _____

Model #: _____

Quantity: _____



Specifications

DL20-1 Model Combination Utility Sink and Utensil/Can Washer and Sanitizer is constructed of 16GA Type 304 stainless steel. Can Washer Unit consists of a coved wash basin with 1" OD tubular equipment supports and a utility sink alongside. Fully integrated outer shell has a 12" high backsplash. Perforated scrap drawercollects solid waste for periodical disposal.

Faucet is T&S #B-1152-092A or equal, with flexible 44" long stainless steel hose and brush spray head mounted on top of backsplash. Double foot pedal valve is T&S #B-0502 or equal, mounted on a stainless steel bracket, and controls heavy-duty nozzle spray head with a 360 degree revolving cleaning pattern. Bottom drains to a 2" brass waste outlet. Entire unit is mounted on adjustable stainless steel legs.

Product Guide

IMC Combination Utility Sink and Utensil/Can Washer and Sanitizers are easily cleanable without the use of tools. All corners are coved and all seams are fully welded and polished.

Combination design with multiple features is ideal for cleaning and washing all large and medium sized utensils and cans/pots.

Faucet is used for pot filling or cleaning. Spray brush head helps loosen solid waste. Built-in nozzle spray head at the bottom provides a powerful cleaning cycle. Scrap tray is to be emptied and easily cleaned.

Utility sink holds and dries cans and washed utensils.

Options

- **USH24** - 24" Utility Shelf
- **USH36** - 36" Utility Shelf
- **DLF** - Can Washer Faucet
- **CWSD** - Scrap Drawer
- **SBL** - Seismic Bolt Down Legs
- **H72** - 72" Long Hose in Lieu of 44"
- **SS12** - Side Splash 12" High (Per Side)

*See Price List for more options

DL20-1 60 0524

DL20-1
Utility Sink & Can Washer

DRAWINGS

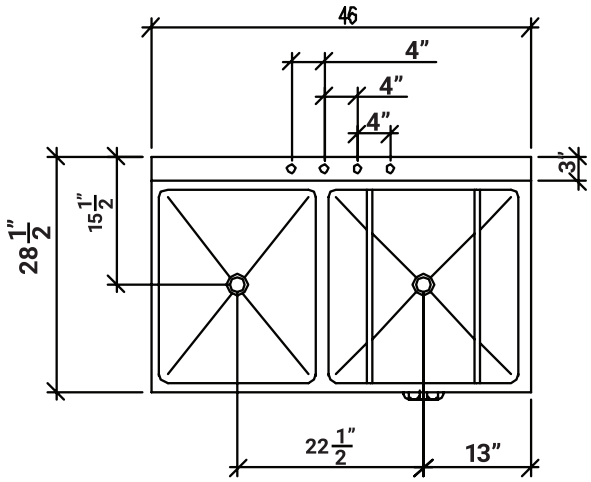

PLAN

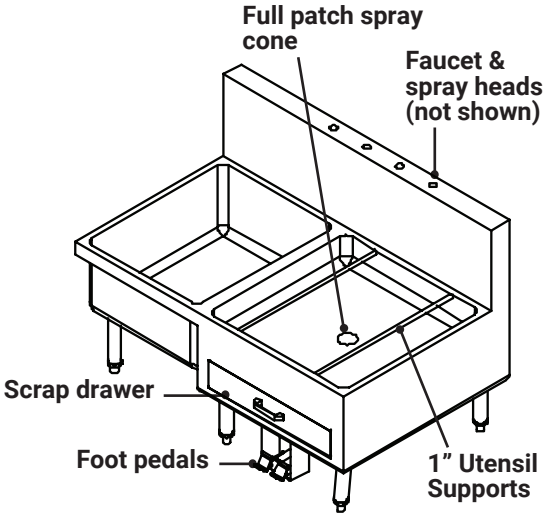

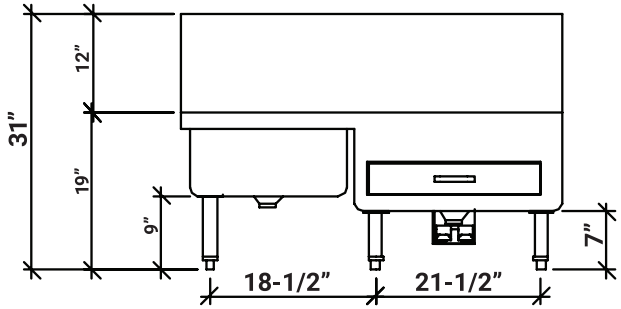

ELEVATION

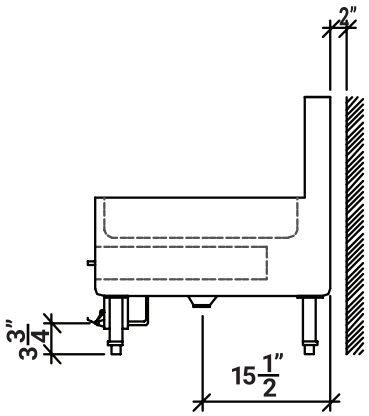

END

UTILITY SINK/CAN WASHER

Model	Size (W x L x H)
☐ DL20-1	28½" x 46" x 31"

Specifications subject to change without notice.

IMC Teddy •11 Ranick Drive South• Amityville, NY 11701• (800) 221-5644• info@imcteddy.com• www.imcteddy.com