IMC/TEDDY
DECADES OF FINE CRAFTSMANSHIP

DTC
Detergent Cabinet

General Information

Project Name: _____

Consultant: _____

Item #: _____

Model #: _____

Quantity: _____



DTC-48

Specifications

DTC Model Detergent Cabinet is constructed of 18GA Type 304 stainless steel body and 16GA Type 300 series stainless steel top with edges turned down.

There is (1) fixed bottom shelf and (3) adjustable intermediate shelves. There is 63" high double pan hinged doors at the front with (2) three point "T" handles, one locking and barrel bolts mounted to inside top and bottom of door.

Unit includes slotted "L" bracket at top rear for securing to the wall. Unit is mounted on 6" high stainless steel legs. Cabinets are polished to #4 finish.

Product Guide

DTC detergent cabinets are ideal for institutional and public buildings. Their height and utility shelf arrangement provides higher storage volume within a compact floor space.

Glass door cabinets can be used in open kitchens or display areas of high profile kitchens.

Options

- ☐ **SECG1-SC** - 1/4" Tempered Glass (Per Door)
- ☐ **PPC-6** - 5" Plate Poly Casters (Set of 6)
- ☐ **PPC-5** - 5" Plate Poly Casters (Set of 4)
- ☐ **TK** - Add Legs in Lieu of Toe Kick
- ☐ **CSGD2** - Center Rail Glass Door (Per Door)
- ☐ **SEC** - Correctional Package
- ☐ **EXSH** - Extra Shelf (4 Standard)
- ☐ **FSH** - Fixed Shelves
- ☐ **FLT** - Sloped Top
- ☐ **KEY** - Replacement Keys
- ☐ **DRL-2P** - Two Point Door Lock

*See Price List for more options

IMC Teddy •11 Ranick Drive South• Amityville, NY 11701• (800) 221-5644• info@imcteddy.com• www.imcteddy.com

DTC
Detergent Cabinet

DRAWINGS

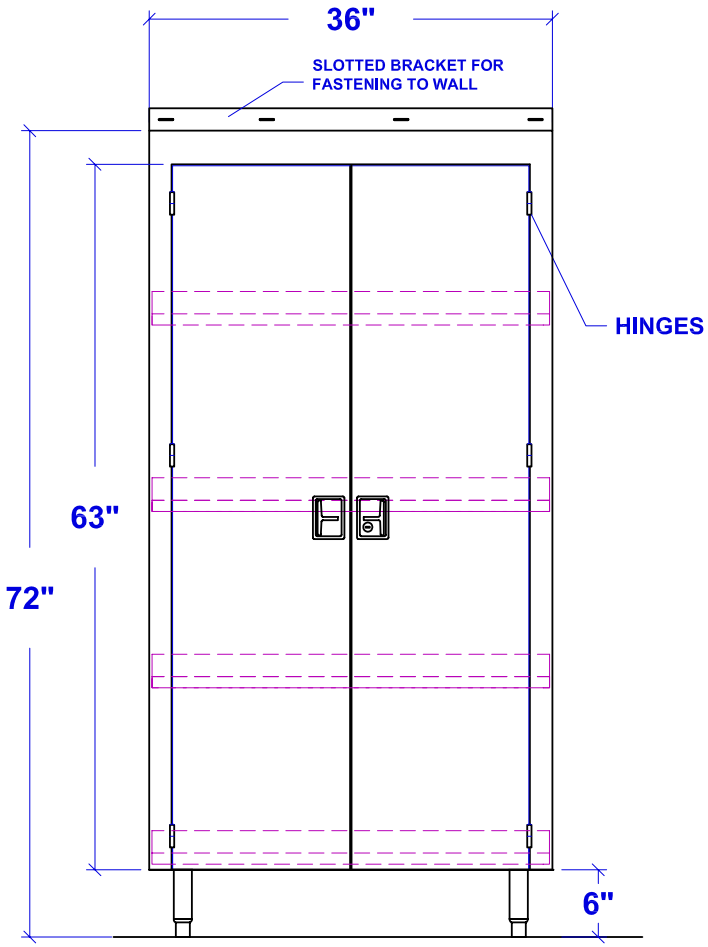

Elevation

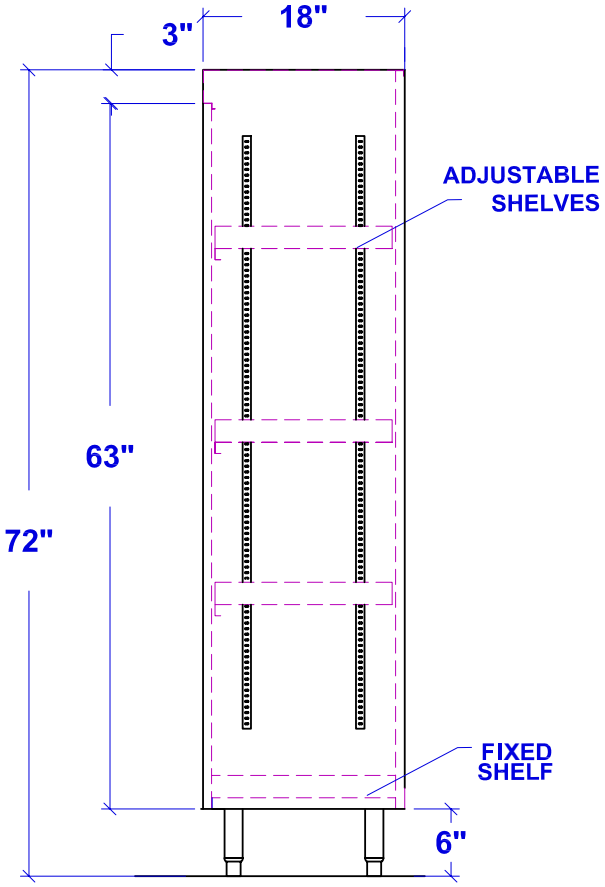

Section

DETERGENT CABINET

Model	Size (W x L)
☐ DTC-36	18” x 36”
☐ DTC-48	18” x 48”
Custom Sizes Available - Consult Factory	

Specifications subject to change without notice.

DTC-40 0325