IMC/TEDDY
DECADES OF FINE CRAFTSMANSHIP

EST
Equipment Stand

General Information

Project Name: _____

Consultant: _____

Item #: _____

Model #: _____

Quantity: _____



Model #EST-36 Shown
w/ Optional Casters

Specifications

EST Model Equipment Stand is constructed of 14GA Type 304 stainless steel with 1½" channel edge and ½" return at front, sides and back 2" up single thickness polished to a brushed finish.

Understructure is 14GA Stainless steel channeling stud welded to top. Undershelf is 18GA Stainless steel type 300 series with channel edge and ½" return corner notch and welded to legs. Legs are 1⅝" Diameter stainless steel with adjustable bullet feet. Gusset is Stainless steel conical type.

Sound deadening is standard for all Model #EST units.

Product Guide

- 14GA Type 304 Stainless Steel
- Legs with Adjustable Bullet Feet
- 18GA Undershelf
- Understructure is Rigidly Braced with Galvanized Channeling
- 24" High

Options

- Radius Edge
- **ME** - Marine Edge
- **C4** - 5" Dia. Swivel Casters with Brakes (4)
- **SS810** - Side Splash 8" or 10" High
- **SCC** - 6" Scrap Chute with Collar
- **B810** - 8" or 10" Backsplash
- See Price Book for more options

*See Price List for more options

IMC Teddy •11 Ranick Drive South• Amityville, NY 11701• (800) 221-5644• info@imcteddy.com• www.imcteddy.com

DRAWINGS

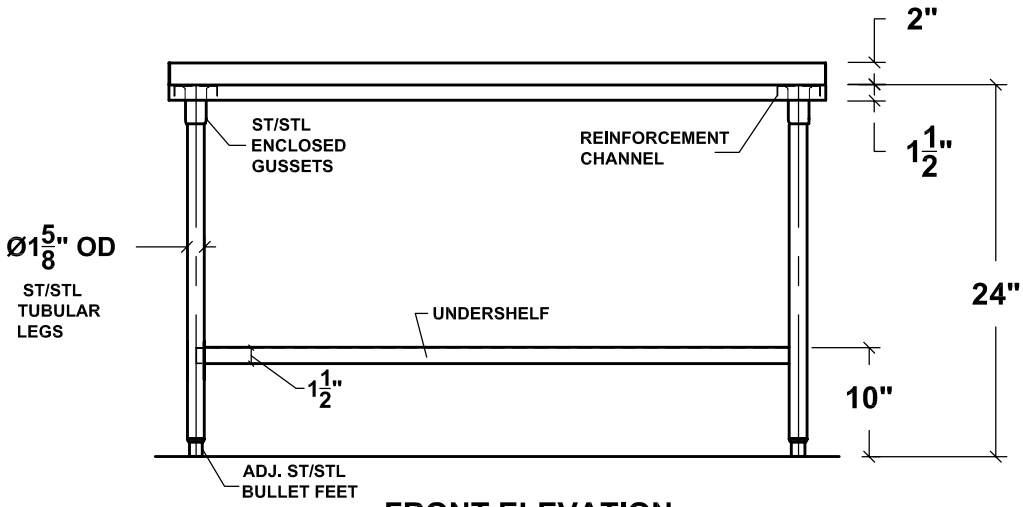

FRONT ELEVATION

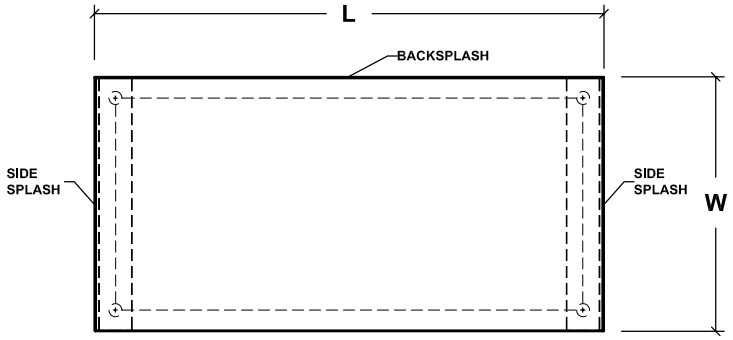

PLAN

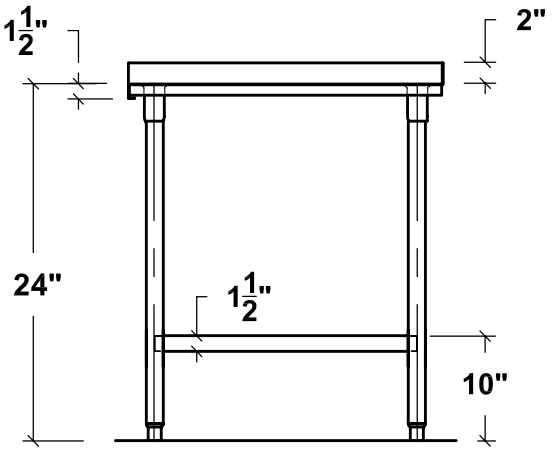

SIDE SECTION

EQUIPMENT STAND

Model	Size (W x L)
□ EST-24	30" x 24"
□ EST-36	30" x 36"
□ EST-48	30" x 48"
□ EST-60	30" x 60"
□ EST-72	30" x 72"
□ EST-84	30" x 84"
□ EST-96	30" x 96"

Specifications subject to change without notice.