IMC/TEDDY
DECADES OF FINE CRAFTSMANSHIP

# FS-AS
## Anti-Spill Floor Sink/Utility Sink

## General Information

Project Name: _____

Consultant: _____

Item #: _____

Model #: _____

Quantity: _____



## Specifications

**FS-AS Model** Anti-Splash Utility Sink is constructed of 16GA Type 304 stainless steel. Unit measures 16½" x 22½" x 7" deep with coved corner sink bowl, a built-in pitch to 2" IPS outlet and integrated full-height apron.

Integral Anti-Splash Design keeps water in the sink and off the floor.

## Product Guide

IMC Utility Sinks are easily cleanable without the use of tools. All corners are coved, and all seams are fully welded and polished.

Rugged type 304, 18-8 stainless steel construction, engineered to stand up under day-in and day-out abuse.

## Options

- **DOD** - 3", 3½", 5", 6", 8" OD Tube (Each)
- **SSF** - Wall Faucet
- **HA** - 36" Hose
- **MH3** - Mop Holder (3)
- **MH4** - Mop Holder (4)
- **MH5** - Mop Holder (5)
- **LH6** - 6" High Legs
- **IPS2** - 2" IPS Drain
- **BW-36** - Custom Bowl up to 36" x 36"
- **FL48** - 48" High Flashing at Rear or Side
- **FL48-W** - Welded 48" High Flashing on 3 Sides
- **RSS8** - Rear & Side Splash 8" High
- **USH24** - 24" Utility Shelf
- **USH36** - 36" Utility Shelf
- **USHC** - Corner Utility Shelf
- **MSR** - Lint Bucket (Mesh Strainer)
- **FF-50** - S/S Flanged Feet (Each)
- **SEC** - Correctional Package

*See Price List for more options



IMC Teddy • 11 Ranick Drive South • Amityville, NY 11701 • (800) 221-5644 • info@imcteddy.com • www.imcteddy.com

# FS-AS
## Anti-Spill Floor Sink/Utility Sink

## DRAWINGS

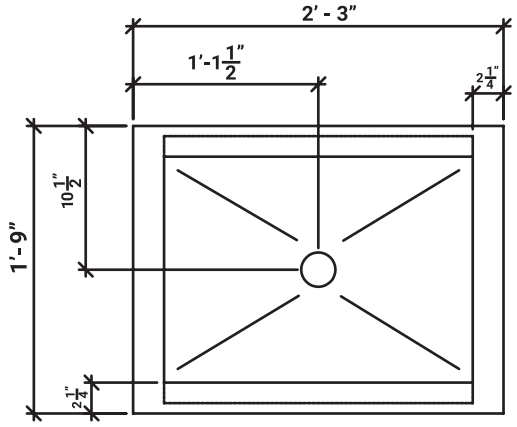


PLAN

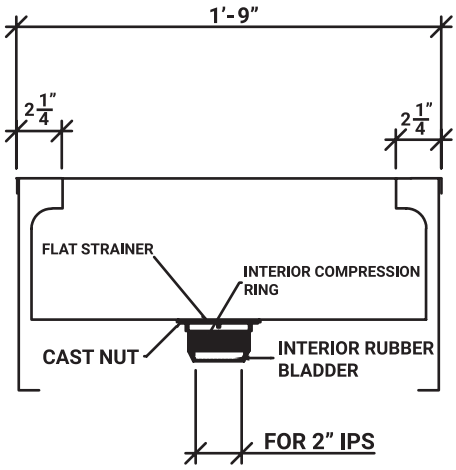


SECTION

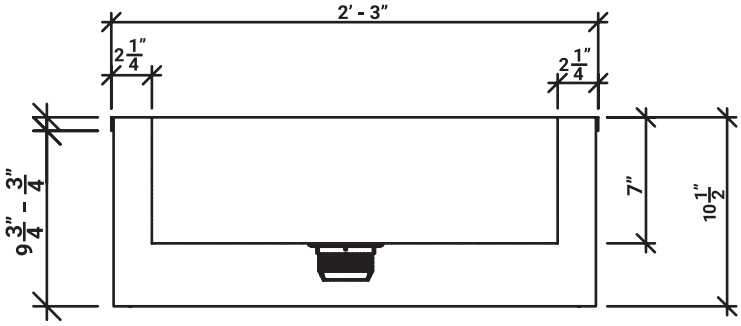


ELEVATION

### ANTI-SPILL FLOOR SINK

| Model | Bowl Size (W x L x H) | Overall Size (W x L x H) |
|---|---|---|
| ☐ FS-AS | 16½" x 22½" x 7" | 21" x 27" x 10½" |

Specifications subject to change without notice.

FS-AS-70-0626