IMC/TEDDY
DECADES OF FINE CRAFTSMANSHIP

FS-C
True Corner Floor Sink/Utility Sink

General Information

Project Name: _____

Consultant: _____

Item #: _____

Model #: _____

Quantity: _____



PROUDLY MADE IN THE USA

Specifications

FS-C Model Corner Utility Sink is constructed of 16GA Type 304 stainless steel, with integrated full-height apron and notched out front.

Sink bowl is 21"x 21" x 8 1/2" deep with built-in pitch to a 2" IPS drain w/ flat strainer. Overall size is 24" x 24" x 12" high. All corners are coved and all seams are fully welded and polished to a #4 finish.

Corner Utility Sink fits any corner and notch front eliminates the need to lift heavy buckets and spillage of dirty water onto the floor.

Product Guide

IMC Utility Sinks are easily cleanable without the use of tools. All corners are coved, and all seams are fully welded and polished.

Rugged type 300 series, 18-8 stainless steel construction, engineered to stand up under day-in and day-out abuse.

Options

- **DOD** - 3", 3½", 5", 6", 8" OD Tube (Each)
- **SSF** - Wall Faucet
- **HA** - 36" Hose
- **MH3** - Mop Holder (3)
- **MH4** - Mop Holder (4)
- **MH5** - Mop Holder (5)
- **LH6** - 6" High Legs
- **BW-36** - Custom Bowl up to 36" x 36"
- **FL48** - 48" High Flashing at Rear or Side
- **FL48-W** - Welded 48" High Flashing on 2 Sides
- **RSS8** - Rear & Side Splash 8" High
- **USHC** - Corner Utility Shelf
- **FF-50** - S/S Flanged Feet (Each)
- **SEC** - Correctional Package

*See Price List for more options

IMC Teddy • 11 Ranick Drive South • Amityville, NY 11701 • (800) 221-5644 • info@imcteddy.com • www.imcteddy.com

FS-C
True Corner Floor Sink/Utility Sink

DRAWINGS

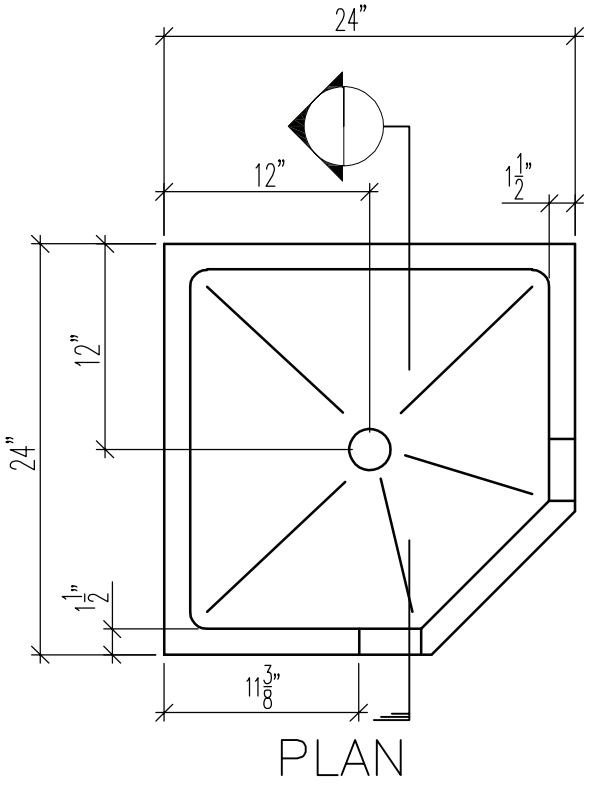

PLAN

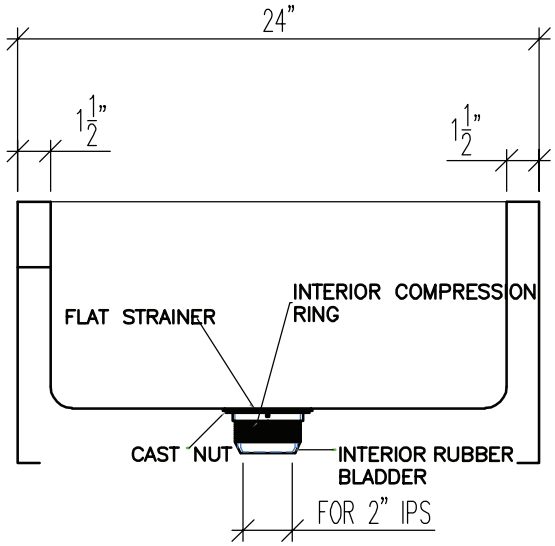

SECTION

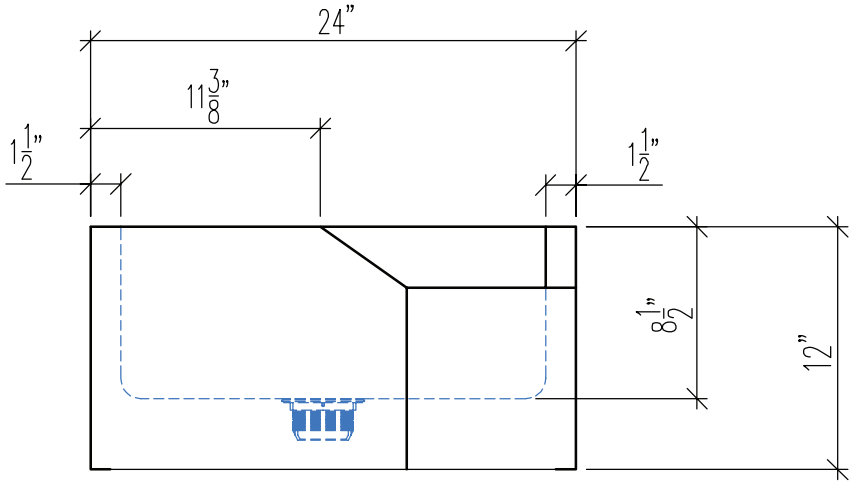

ELEVATION

TRUE CORNER FLOOR SINK

Model	Bowl Size (W x L x H)	Overall Size (W x L x H)
☐ FS-C	21" x 21" x 8½"	24" x 24" x 12"

Specifications subject to change without notice.

IMC Teddy • 11 Ranick Drive South • Amityville, NY 11701 • (800) 221-5644 • info@imcteddy.com • www.imcteddy.com