IMC/TEDDY
DECADES OF FINE CRAFTSMANSHIP

FS-H
Heavy Duty Floor Sink / Utility Sink

General Information

Project Name: _____

Consultant: _____

Item #: _____

Model #: _____

Quantity: _____



Specifications

FS-H Model Heavy Duty Utility Sink is constructed of 16GA Type 304 stainless steel. Unit measures 24" x 18" x 12" deep with integrated full-height apron and built in pitch to 4" OD waste outlet with strainer.

Product Guide

IMC Utility Sinks are easily cleanable without the use of tools. All corners are coved, and all seams are fully welded and polished.

Rugged type 304, 18-8 stainless steel construction, engineered to stand up under day-in and day-out abuse.

Options

- **DOD** - 3", 3½", 5", 6", 8" OD Tube (Each)
- **SSF** - Wall Faucet
- **HA** - 36" Hose
- **MH3** - Mop Holder (3)
- **MH4** - Mop Holder (4)
- **MH5** - Mop Holder (5)
- **LH6** - 6" High Legs
- **IPS2** - 2" IPS Drain
- **BW-36** - Custom Bowl up to 36" x 36"
- **FL48** - 48" High Flashing at Rear or Side
- **FL48-W** - Welded 48" High Flashing on 3 Sides
- **RSS8** - Rear & Side Splash 8" High
- **USH24** - 24" Utility Shelf
- **USH36** - 36" Utility Shelf
- **USHC** - Corner Utility Shelf
- **MSR** - Lint Bucket (Mesh Strainer)
- **FF-50** - S/S Flanged Feet (Each)
- **SEC** - Correctional Package

*See Price List for more options

IMC Teddy • 11 Ranick Drive South • Amityville, NY 11701 • (800) 221-5644 • info@imcteddy.com • www.imcteddy.com

FS-H

Heavy Duty Floor Sink / Utility Sink

DRAWINGS

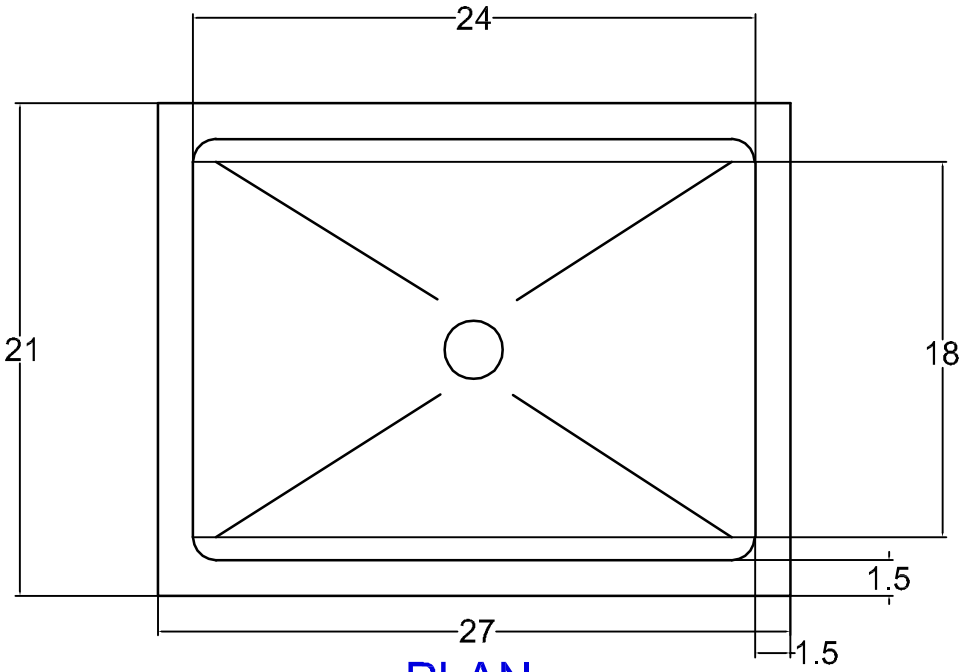

PLAN

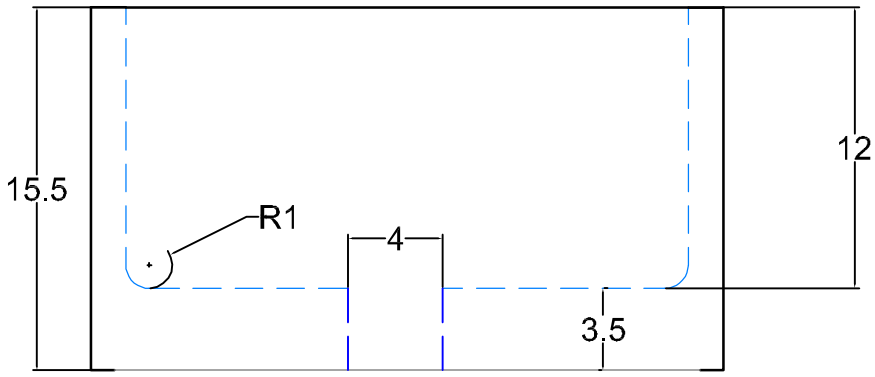

FRONT ELEVATION

HEAVY DUTY FLOOR SINK

Model	Bowl Size (W x L x H)	Overall Size (W x L x H)
☐ FS-H	24" x 18" x 12"	27" x 21" x 15½"

Specifications subject to change without notice.

FS-H-40 0626