IMC/TEDDY
DECADES OF FINE CRAFTSMANSHIP

HS
Free Standing Hand Sink

General Information

Project Name: _____

Consultant: _____

Item #: _____

Model #: _____

Quantity: _____



HS shown with Optional Hinged Door, Electronic Faucet & (TD) Towel Dispenser

HS-X Shown with Optional Hinged Door

Specifications

HS Model Free Standing Hand Sink is constructed of 16GA Type 304 stainless steel, with integral backsplash and non-drip marine edges, coved corner sink bowl and built-in pitch to 1½" waste outlet.

Body is 18GA stainless steel with removable access panel and built-in toe recess. Deck mounted soap dispenser has 1-pint capacity. Faucet is T&S #B-1105, or equal, splash-mounted, with rigid gooseneck and wrist-action handles.

HS-X Model - same as above without faucet and soap dispenser. Faucet hole can be provided.

HS-SEC Model - Security Model with 16GA body and rear coves.

Product Guide

IMC Hand Sinks are easily cleanable without the use of tools. All corners are coved, and all seams are fully welded and polished.

HS Hand Sinks are based on the WS Model design with a large deck for a faucet and soap dispenser. High backsplash protects wall and keeps sinks sanitary.

Integral cabinet body supports sink and provides access to plumbing. Optional door and shelf can be used for storage below sink.

Options

- ☐ **SS** - Side Splashes (Pair)
- ☐ **DRL** - Door Lock
- ☐ **HGD** - Hinged Door w/ Shelf
- ☐ **TWB** - Tubular Wall Brackets
- ☐ **RSOD** - Rear Sink Overflow Drain
- ☐ **IWC** - Integral Waste Can
- ☐ **P** - Back Panel
- ☐ **CBW** - Custom Bowl Size

*See Price List for more options

FREE STANDING HAND SINK

Model	Description	Overall Size
☐ HS	With Faucet	19¼" x 20½" x 50⅞"
☐ HS-X	Without Faucet	19¼" x 20½" x 50⅞"
☐ HS-SEC	Security Model	19¼" x 20½" x 50⅞"

HS-011 0526

HS
Free Standing Hand Sink

DRAWINGS

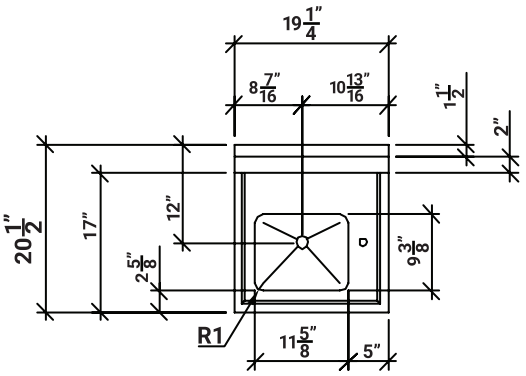

PLAN

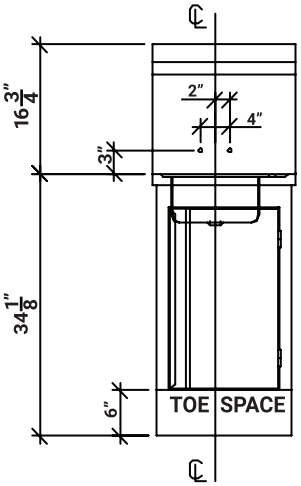

FRONT VIEW

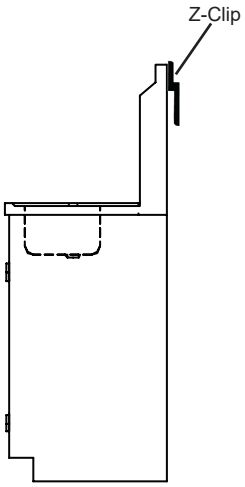

SECTION

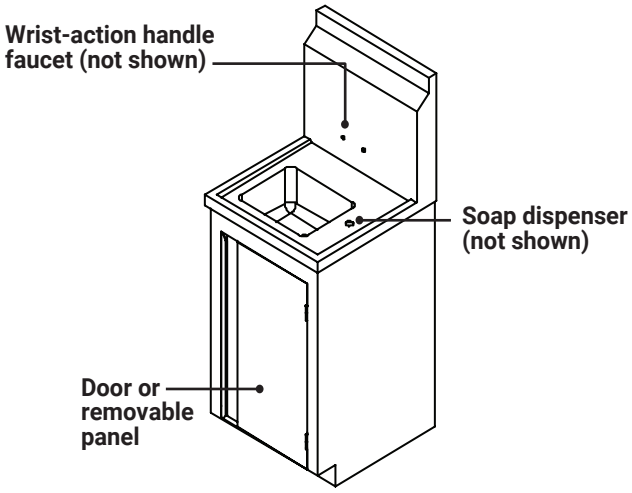

ACCESSORIES

(See Price Book Pg. 66-68)



RGLH
Gooseneck Faucet



EFD
Electronic Faucet



KNV
Double Knee Valve & Gooseneck Spout



EW-S
Eye Wash Faucet



TD
Towel Dispenser



CTSD
Combo Towel & Soap Dispenser



ITSD
Integral Towel & Soap Dispenser

Specifications subject to change without notice.

HS-011 0526