LG
Louvered Grating

General Information

Project Name: _____

Consultant: _____

Item #: _____

Model #: _____

Quantity: _____



Specifications

LG Model Louvered Grating is constructed of 16GA Type 304 stainless steel, with die-formed louvers, in one-piece design, formed and fully welded, polished and ground smooth, surfaces to have brushed satin finish, with 1" height.

Gratings are sized up to 20" long sections.

Product Guide

IMC Floor Trough Gratings are specially designed to provide sanitary carefree use - to permit quick, efficient and thorough cleaning.

Rugged stainless steel construction, engineered to stand up under day-in and day-out abuse.

Floor Trough Gratings can be easily built to specific custom dimensions to fit the operator's special needs and requirements. Our engineers would be delighted to put their experience and knowledge to work for you in planning the most efficient use of your space.

Options

- ☐ Custom Lengths
- ☐ Custom Widths
- ☐ Standard and Stock Sizes Fit Most Applications

*See Price List for more options

IMC Teddy • 11 Ranick Drive South • Amityville, NY 11701 • (800) 221-5644 • info@imcteddy.com • www.imcteddy.com

LG
Louvered Grating

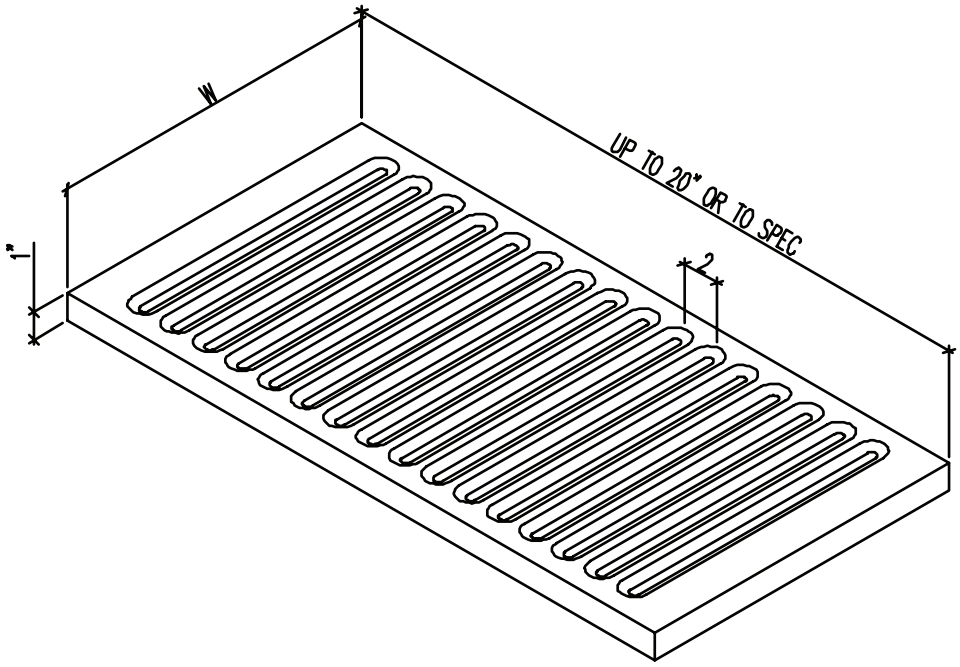

LOUVERED GRATING, STANDARD DESIGN

Model	Size (W x L)	Model	Size (W x L)	Model	Size (W x L)	Model	Size (W x L)
☐ LG-1224	12” x 24”	☐ LG-1824	18” x 24”	☐ LG-2424	24” x 24”	☐ LG-3024	30” x 24”
☐ LG-1236	12” x 36”	☐ LG-1836	18” x 36”	☐ LG-2436	24” x 36”	☐ LG-3036	30” x 36”
☐ LG-1248	12” x 48”	☐ LG-1848	18” x 48”	☐ LG-2448	24” x 48”	☐ LG-3048	30” x 48”
☐ LG-1260	12” x 60”	☐ LG-1860	18” x 60”	☐ LG-2460	24” x 60”	☐ LG-3060	30” x 60”
☐ LG-1272	12” x 72”	☐ LG-1872	18” x 72”	☐ LG-2472	24” x 72”	☐ LG-3072	30” x 72”
☐ LG-1284	12” x 84”	☐ LG-1884	18” x 84”	☐ LG-2484	24” x 84”	☐ LG-3084	30” x 84”
☐ LG-1296	12” x 96”	☐ LG-1896	18” x 96”	☐ LG-2496	24” x 96”	☐ LG-3096	30” x 96”
☐ LG-12108	12” x 108”	☐ LG-18108	18” x 108”	☐ LG-24108	24” x 108”	☐ LG-30108	30” x 108”
☐ LG-12120	12” x 120”	☐ LG-18120	18” x 120”	☐ LG-24120	24” x 120”	☐ LG-30120	30” x 120”

☐ Custom Size: LG-_____

Specifications subject to change without notice.

IMC Teddy • 11 Ranick Drive South • Amityville, NY 11701 • (800) 221-5644 • info@imcteddy.com • www.imcteddy.com