IMC/TEDDY
DECADES OF FINE CRAFTSMANSHIP

MSC-30
Mop Sink Cabinet

General Information

Project Name: _____

Consultant: _____

Item #: _____

Model #: _____

Quantity: _____



Specifications

MSC Model Single Mop Cabinet is constructed of 18GA Type 304 stainless steel with (1) one 20GA door. The cabinet is 30" wide x 24" deep x 84" high with a 5" deep sink with a 4" waste outlet. Utility spray hose and (2) two mop holders are included with the unit. The upper section of the cabinet has (1) one fixed shelf notched for mop handles. The cabinet base is fully enclosed and mounted on adjustable legs for leveling.

Hinged stainless steel doors fully enclose the cabinet. Door catches provided, keeps door closed when not in use.

Beehive strainer is included. Sloped top comes standard.

Product Guide

The Mop Sink Cabinet is designed for use where space is limited and helps follow acceptable sanitary practices in any size facility. Mop buckets for kitchen and customer areas can be easily emptied, cleaned and refilled as needed.

The shelf provides storage space for cleaning supplies. Optional removable sink covers provide additional storage when the sinks are not being used.

The design features and attractive finish of the IMC/Teddy Utility Cabinet allows placing this unit in cooking, prepping and customer areas. Compact facilities are particularly suited for use of this unit, as are most other establishments.

Options

- ☐ **IPS2** - 2" IPS Drain
- ☐ **FLT** - Flat Top
- ☐ **SDRT-1** - Door on Top Storage Area
- ☐ **DRL** - Door Locks (each)
- ☐ **SCV** - S/S Flat Cover Over Sink (for use as temporary storage when sink is not in use)
- ☐ **CIS** - Intermediate Shelf in Top Storage Area
- ☐ Full Length Door with (3) Hinges
- ☐ Open Back
- ☐ Security Package
- ☐ **KPSF** - 12" Kettle & Pot Sink Faucet in Lieu of Standard

*See Price List for more options

IMC Teddy •11 Ranick Drive South• Amityville, NY 11701• (800) 221-5644• info@imcteddy.com• www.imcteddy.com

IMC/TEDDY
DECADES OF FINE CRAFTSMANSHIP

MSC-30
Mop Sink Cabinet

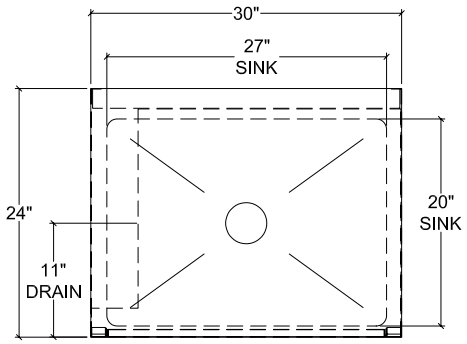

PLAN

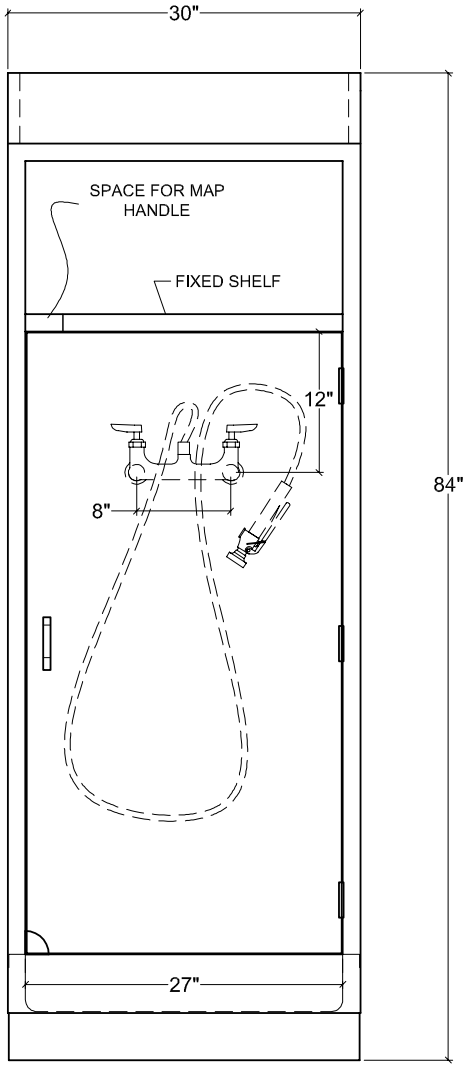

ELEVATION

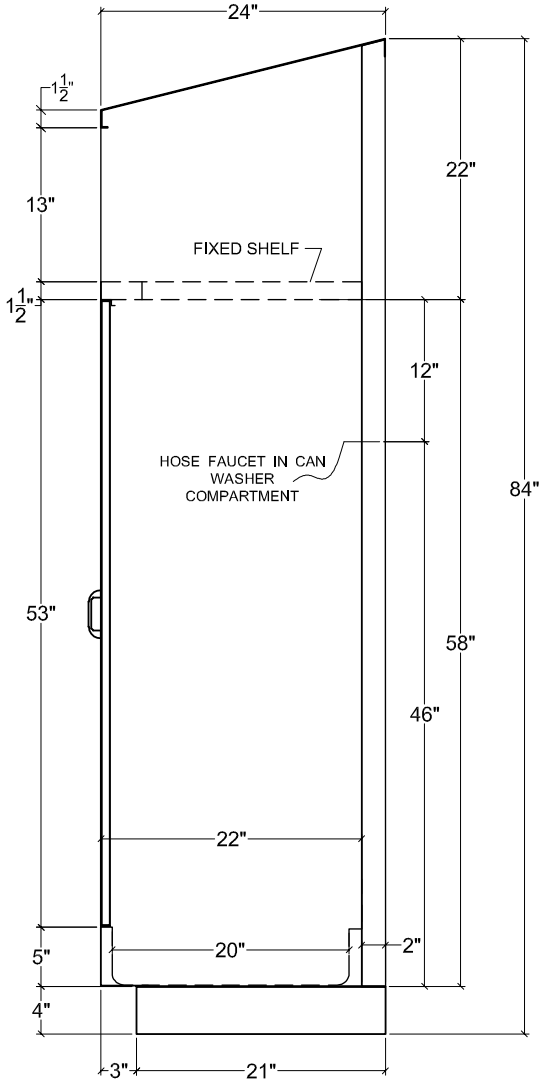

SIDE ELEVATION

Specifications subject to change without notice.

MSC-012 0524