IMC/TEDDY
DECADES OF FINE CRAFTSMANSHIP

PRC
Ceiling Mounted Pot Racks

General Information

Project Name: _____

Consultant: _____

Item #: _____

Model #: _____

Quantity: _____

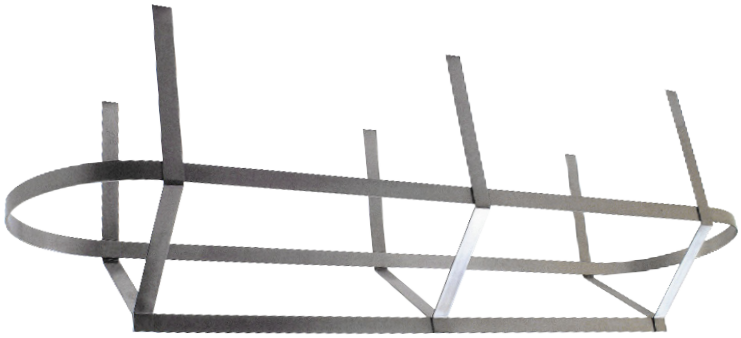

Model # PRC-3-2460

PROUDLY MADE IN THE USA

Specifications

PRC Model Three Bar Ceiling Mounted Pot Rack is constructed of 12GA Type 304 2" x 3/16" stainless steel flat bar.

Pot hooks supplied to be stainless steel double duty, sliding type and spaced 9" apart. Center support supplied on units over 6' long. Included are 12GA stainless steel ceiling hangers, suggested height of top of unit to floor is 7'-6".

Product Guide

IMC Pot Racks are simply the best way to display and store your fine cookware, utensils or decorative items. Hangs from ceiling and accommodates all kitchens. Hang over the stove-top, sink, island, or any other desirable space in your kitchen. Maximize space with as it neatly allows you to arrange your cookware to prevent stacking damage, an essential rack for any kitchen.

Options

- ☐ **BU** - 1/4" Bar in Lieu of 3/16"
- ☐ **GA-16** - 16GA Upgrade
- ☐ **PTH** - Additional Stainless Steel Pot Hooks (Each)
- ☐ **LVS** - Louvered Shelves
- ☐ **PVL** - Provision for Lamps (Each)
- ☐ **TMW** - Table Mounted WMS
- ☐ Welded S/S Pot Hooks

*See Price List for more options

IMC Teddy •11 Ranick Drive South• Amityville, NY 11701• (800) 221-5644• info@imcteddy.com• www.imcteddy.com

PRC
Ceiling Mounted Pot Racks

DRAWINGS

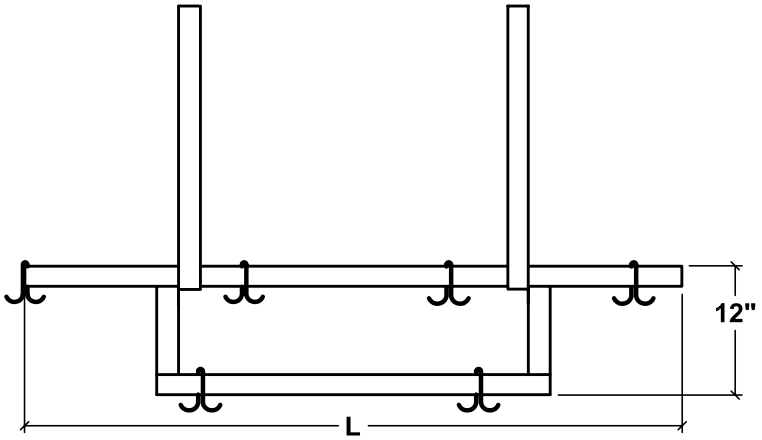

FRONT ELEVATION

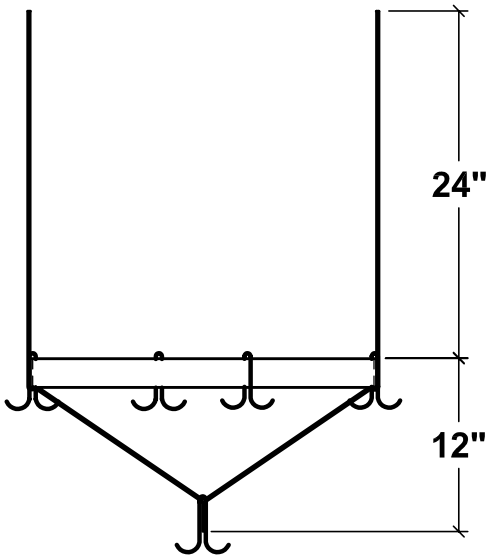

SIDE ELEVATION

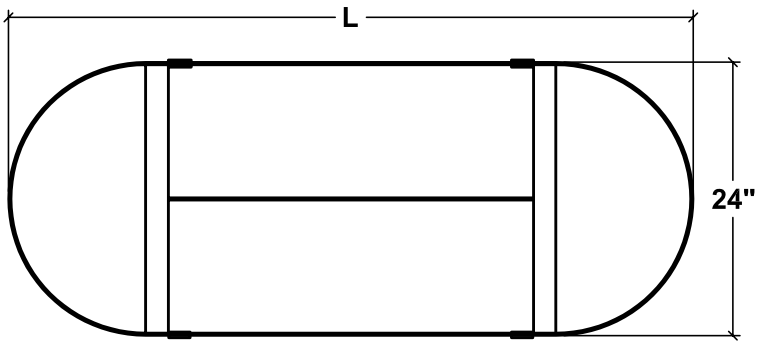

PLAN

CEILING MOUNTED POT RACK

Model #	Size (W x L)
□ PRC-3-2436	24” x 36”
□ PRC-3-2448	24” x 48”
□ PRC-3-2460	24” x 60”
□ PRC-3-2472	24” x 72”
□ PRC-3-2484	24” x 84”
□ PRC-3-2496	24” x 96”
□ PRC-3-24108	24” x 108”
□ PRC-3-24120	24” x 120”
□ PRC-3-24132	24” x 132”
□ PRC-3-24144	24” x 144”

Specifications subject to change without notice.

IMC Teddy •11 Ranick Drive South• Amityville, NY 11701• (800) 221-5644• info@imcteddy.com• www.imcteddy.com