IMC/TEDDY
DECADES OF FINE CRAFTSMANSHIP

SCSD
Soiled Dishtable w/ Pre-Rinse Sink - Corner

General Information

Project Name:_____

Consultant:_____

Item #:_____

Model #:_____

Quantity:_____



Model # SCSD-48R
Shown w/ Optional Scrap Block

PROUDLY MADE IN THE USA

Specifications

- **Top:** 14GA or 16GA Type 304 stainless steel with 8" backsplash 2" return at 45 degrees and ½" turn-down & 1" radius corners. Polished to a #4 finish.
- **Pre-Rinse Sink:** 20" x 20" x 5" with coved corners & scrap basket.
- **Understructure:** 16GA stainless steel channeling. Sound deadening is applied to the underside as a standard.
- **Gussets:** Stainless steel conical type with inner sleeve and set screw.
- **Legs:** 1⅝" OD stainless steel tubing, T304 (18/8).
- **Crossbracing:** 1¼" OD stainless steel tubing notched and welded to legs.
- **Feet:** Stainless steel adjustable bullet type.

Product Guide

Dishtables provide the perfect space to place dirty dishes before running them through your commercial dishwasher or to store clean dishes before they are put away. Choose from straight, L-shaped, or U-shaped tables to set up a ware-washing area that accommodates your daily routine. Link a dishtable to your conveyor, single, or double rack dishwasher, or connect one to your three compartment sink, so you can wash dishes more efficiently. We also offer undercounter styles for use in your bar or small prep area.

Options

- **B810** - 10" High Backsplash
- **SRB** - Scrap Block
- **SSU** - 18GA Undershelf
- **CC** - Corner or Column Cutout
- **FF-50** - Flanged Feet
- **RSP** - Return Splash
- **RSW** - Rack Shelf - Wall Mtd.
- **RST** - Rack Shelf - Table Mtd.
- **RSD** - Rack Shelf - Double Service
- **TLS** - Table Limit Switch

*See Price List for more options

IMC Teddy •11 Ranick Drive South• Amityville, NY 11701• (800) 221-5644• info@imcteddy.com• www.imcteddy.com

IMC/TEDDY
DECADES OF FINE CRAFTSMANSHIP

SCSD

Soiled Dishtable w/ Pre-Rinse Sink - Corner

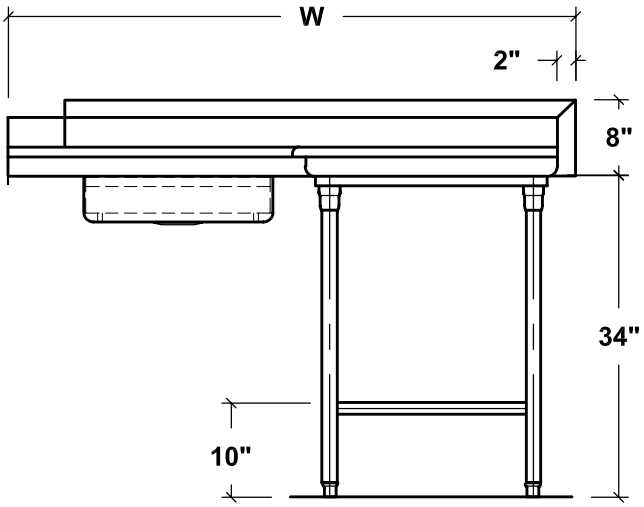

FRONT ELEVATION

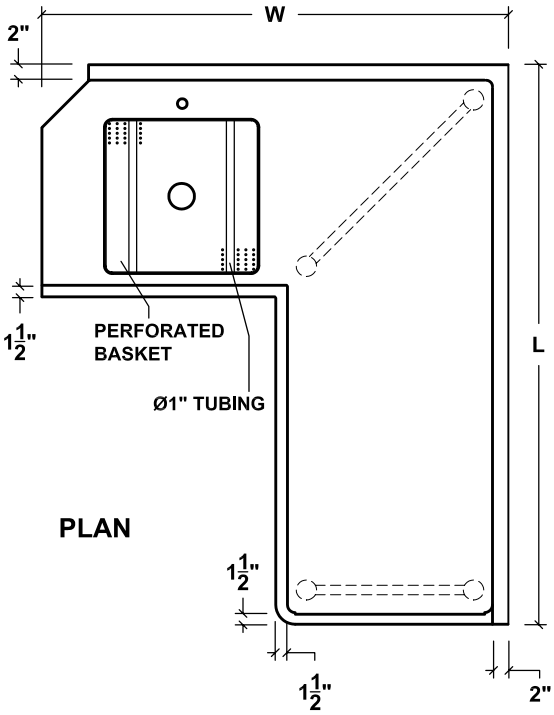

PLAN

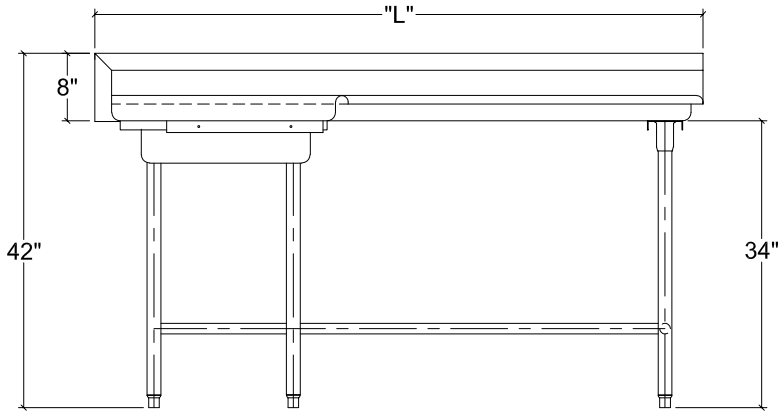

SIDE ELEVATION

SOILED DISHTABLE WITH PRE-RINSE SINK - CORNER

14GA Model	16GA Model	Size (W x L x D)
□ SCSD-48RorL	□ SCSD-48-16RorL	60" x 48" x 30"
□ SCSD-60RorL	□ SCSD-60-16RorL	60" x 60" x 30"
□ SCSD-72RorL	□ SCSD-72-16RorL	60" x 72" x 30"
□ SCSD-84RorL	□ SCSD-84-16RorL	60" x 84" x 30"
□ SCSD-96RorL	□ SCSD-96-16RorL	60" x 96" x 30"
□ SCSD-108RorL	□ SCSD-108-16RorL	60" x 108" x 30"
□ SCSD-120RorL	□ SCSD-120-16RorL	60" x 120" x 30"

Specifications subject to change without notice.

SCSD-60 0524