IMC/TEDDY
DECADES OF FINE CRAFTSMANSHIP

SEC-FT
Security Design

General Information

Project Name: _____

Consultant: _____

Item #: _____

Model #: _____

Quantity: _____

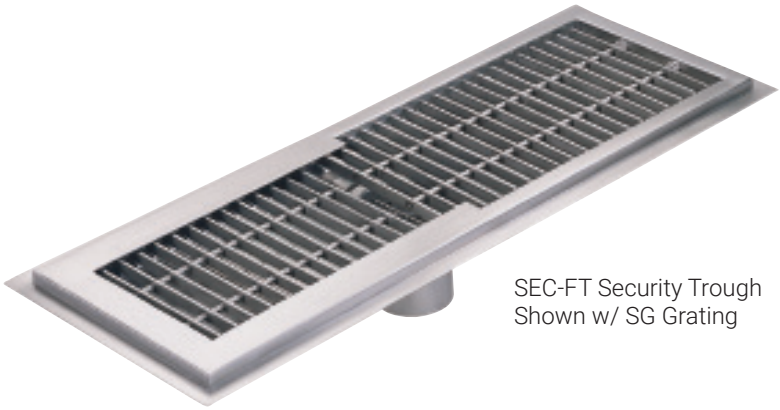

SEC-FT Security Trough
Shown w/ SG Grating

Specifications

SEC-FT Model Security/Correctional Floor Trough is constructed of 14 gauge Type 304 stainless steel, with large integral coves and pitched to a 6½" OD waste outlet with 4" OD tailpiece. Perforated waste basket is secured with a tamperproof screw. Anchor straps secure trough to the floor.

Correctional frame secures grating to ledge. Grating slides into frame and is held secure by a special locking device with tamperproof screws. Troughs are 4" deep.

Joints are TIG welded and leakproof. Exposed surfaces finished brush satin.

Product Guide

Use for Correctional, Penal and Justice Buildings.

Continuous security frame for grating is virtually "attack-proof".

Integral coves, deep pitch and a large waste cup similar to FT.

Recessed flange supports floor tile and provides a grout pocket.

Use extension arms and intersections for multiple equipment.

Combine with other IMC designs, such as Anti-Spill or Floor Pans for maximum versatility.

Options

- Use with Any Style IMC Trough Grating
- Custom Designs, Sizes and Waste Location **(12GA Not Available)**
- Optional Wastes and Locations
- Seepage Flange and "Weep" Holes

*See Price List for more options

IMC Teddy • 11 Ranick Drive South • Amityville, NY 11701 • (800) 221-5644 • info@imcteddy.com • www.imcteddy.com

IMC/TEDDY
DECADES OF FINE CRAFTSMANSHIP

SEC-FT
Security Design

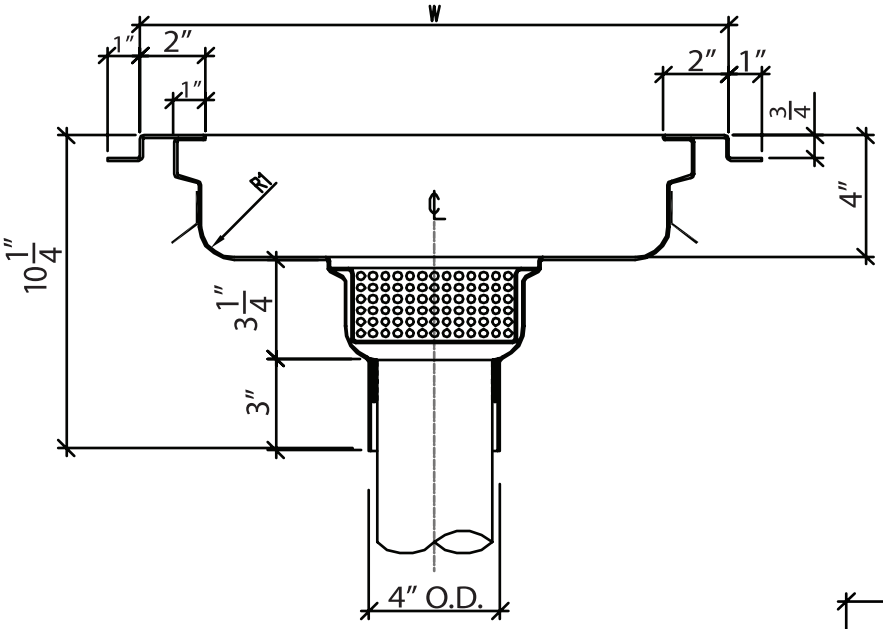

Box Out Size

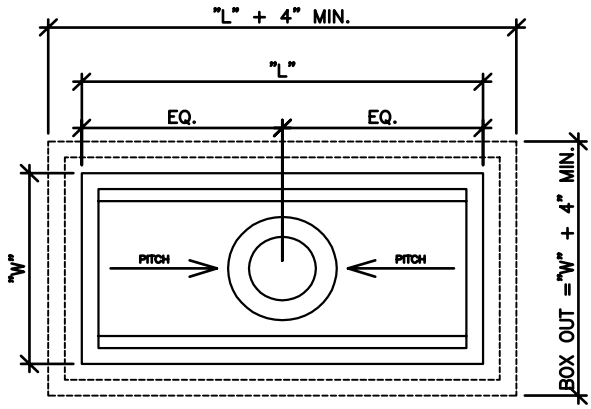

Trough Area

- Width (PIT) = Width ("W") + 4" Minimum
- Length (PIT) = Length ("L") + 4" Minimum
- Depth (PIT) = Depth of Trough + 1/2" + Finish Floor
- Size of Rough-In Hole For Drains $7^{1/2}$ Ø Minimum

SECURITY FLOOR TROUGHS

Model	Size (W x L)	Model	Size (W x L)	Model	Size (W x L)	Model	Size (W x L)
□ SEC-FT-1224	12" x 24"	□ SEC-FT-1824	18" x 24"	□ SEC-FT-2424	24" x 24"	□ SEC-FT-3024	30" x 24"
□ SEC-FT-1230	12" x 30"	□ SEC-FT-1830	18" x 30"	□ SEC-FT-2430	24" x 30"	□ SEC-FT-3030	30" x 30"
□ SEC-FT-1236	12" x 36"	□ SEC-FT-1836	18" x 36"	□ SEC-FT-2436	24" x 36"	□ SEC-FT-3036	30" x 36"
□ SEC-FT-1248	12" x 48"	□ SEC-FT-1848	18" x 48"	□ SEC-FT-2448	24" x 48"	□ SEC-FT-3048	30" x 48"
□ SEC-FT-1260	12" x 60"	□ SEC-FT-1860	18" x 60"	□ SEC-FT-2460	24" x 60"	□ SEC-FT-3060	30" x 60"
□ SEC-FT-1272	12" x 72"	□ SEC-FT-1872	18" x 72"	□ SEC-FT-2472	24" x 72"	□ SEC-FT-3072	30" x 72"
□ SEC-FT-1284	12" x 84"	□ SEC-FT-1884	18" x 84"	□ SEC-FT-2484	24" x 84"	□ SEC-FT-3084	30" x 84"
□ SEC-FT-1296	12" x 96"	□ SEC-FT-1896	18" x 96"	□ SEC-FT-2496	24" x 96"	□ SEC-FT-3096	30" x 96"
□ SEC-FT-12108	12" x 108"	□ SEC-FT-18108	18" x 108"	□ SEC-FT-24108	24" x 108"	□ SEC-FT-30108	30" x 108"
□ SEC-FT-12120	12" x 120"	□ SEC-FT-18120	18" x 120"	□ SEC-FT-24120	24" x 120"	□ SEC-FT-30120	30" x 120"

□ Custom Size: SEC-_____- _____

Note - Standard troughs up to 96" have one (1) waste at center. Over 96", troughs have two (2) wastes equidistant.

Specifications subject to change without notice.

SEC-FT-80 0524