IMC/TEDDY
DECADES OF FINE CRAFTSMANSHIP

SFT
Shallow Floor Trough

General Information

Project Name: _____

Consultant: _____

Item #: _____

Model #: _____

Quantity: _____



Specifications

SFT Model Shallow Floor Trough is constructed of 14GA Type 304 stainless steel, with large integral coves and pitched ¼" per foot to a 6½" OD waste outlet with 4" OD tailpiece. Perforated waste basket provided at each drain. Anchor straps welded to the sides secure trough to the floor.

Recessed flange and 1" deep ledge for IMC grating are integral with the unit. Trough is 2" deep overall.

Joints are TIG welded and leakproof. Exposed surfaces finished brush satin.

Product Guide

Use for food prep facilities where floor thickness limits trough depth to 2".

Integral coves, deep pitch and a large waste cup, assure quick and complete drainage.

Recessed flange supports floor tile and provides a grout pocket.

Setting frame for waterproof membrane and/or integral seepage flange with "weep" holes can be added for wet floor areas.

Options

- ☐ **DOD** - 3", 3½", 5", 6", 8" OD Tube (circle one)
- ☐ **WTO** - Waste Tube over 3" Long
- ☐ **AW** - Additional Wastes
- ☐ **WCP** - Waste Cup Strainers
- ☐ **BH** - Beehive Strainers (Each)
- ☐ **OCW** - Off Center Waste (Each)
- ☐ **ST12** - Scrap Tray Up to 18" Wide
- ☐ **PWT** - Perforated Waste Pipe
- ☐ **SF-2** - Special Size Setting Flange 2" Deep
- ☐ **SF-4** - Special Size Setting Flange 2" to 4" Deep
- ☐ **OWT** - Oversize Waste Tube
- ☐ **FSG** - Seepage Flange w/ Weep Holes
- ☐ **ST20** - Scrap Tray 20" Long
- ☐ **DSE** -Drain on the End
- ☐ **ROD** - Rim on Drain
- ☐ **BSPC** - Basket Strainer w/ Handle & Chain
- ☐ **BXD** - Box Type Drain
- ☐ **BSX** - Beehive Strainer for Box Drain

*See Price List for more options

IMC Teddy • 11 Ranick Drive South • Amityville, NY 11701 • (800) 221-5644 • info@imcteddy.com • www.imcteddy.com

IMC/TEDDY
DECADES OF FINE CRAFTSMANSHIP

SFT
Shallow Floor Trough

DRAWINGS

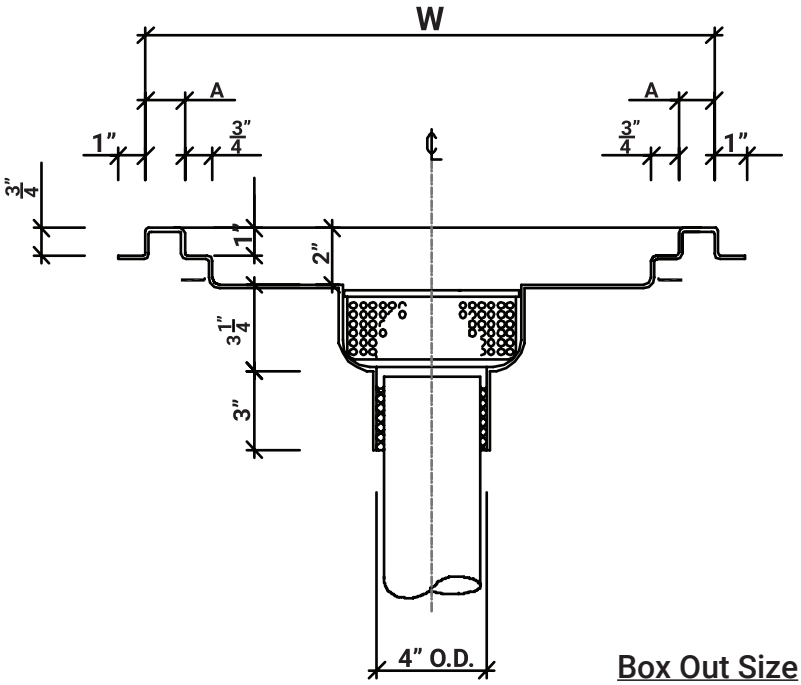

A = 1" for Troughs up to 15" Wide
A = 1 1/2" for Troughs over 15" Wide

Box Out Size

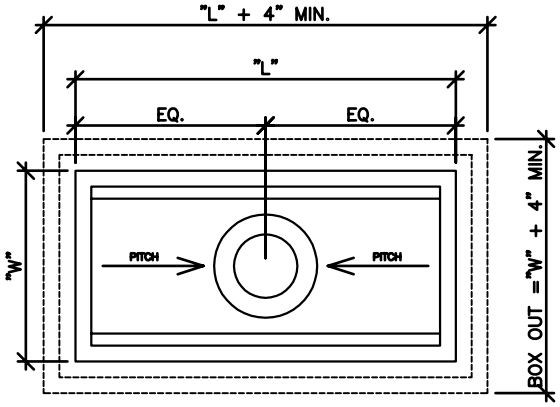

Trough Area

- Width (PIT) = Width ("W") + 4" Minimum
- Length (PIT) = Length ("L") + 4" Minimum
- Depth (PIT) = Depth of Trough + 1/2" + Finish Floor
- Size of Rough-In Hole For Drains 7½ Ø Minimum

SHALLOW FLOOR TROUGHS

Model	Size (W x L)	Model	Size (W x L)	Model	Size (W x L)	Model	Size (W x L)
☐ SFT-1224	12" x 24"	☐ SFT-1824	18" x 24"	☐ SFT-2424	24" x 24"	☐ SFT-3024	30" x 24"
☐ SFT-1230	12" x 30"	☐ SFT-1830	18" x 30"	☐ SFT-2430	24" x 30"	☐ SFT-3030	30" x 30"
☐ SFT-1236	12" x 36"	☐ SFT-1836	18" x 36"	☐ SFT-2436	24" x 36"	☐ SFT-3036	30" x 36"
☐ SFT-1248	12" x 48"	☐ SFT-1848	18" x 48"	☐ SFT-2448	24" x 48"	☐ SFT-3048	30" x 48"
☐ SFT-1260	12" x 60"	☐ SFT-1860	18" x 60"	☐ SFT-2460	24" x 60"	☐ SFT-3060	30" x 60"
☐ SFT-1272	12" x 72"	☐ SFT-1872	18" x 72"	☐ SFT-2472	24" x 72"	☐ SFT-3072	30" x 72"
☐ SFT-1284	12" x 84"	☐ SFT-1884	18" x 84"	☐ SFT-2484	24" x 84"	☐ SFT-3084	30" x 84"
☐ SFT-1296	12" x 96"	☐ SFT-1896	18" x 96"	☐ SFT-2496	24" x 96"	☐ SFT-3096	30" x 96"
☐ SFT-12108	12" x 108"	☐ SFT-18108	18" x 108"	☐ SFT-24108	24" x 108"	☐ SFT-30108	30" x 108"
☐ SFT-12120	12" x 120"	☐ SFT-18120	18" x 120"	☐ SFT-24120	24" x 120"	☐ SFT-30120	30" x 120"

Note - Standard troughs up to 96" have one (1) waste at center. Over 96", troughs have two (2) wastes equidistant.

Specifications subject to change without notice.

SFT-20 0524