IMC/TEDDY
DECADES OF FINE CRAFTSMANSHIP

SG
Subway Grating

General Information

Project Name: _____

Consultant: _____

Item #: _____

Model #: _____

Quantity: _____

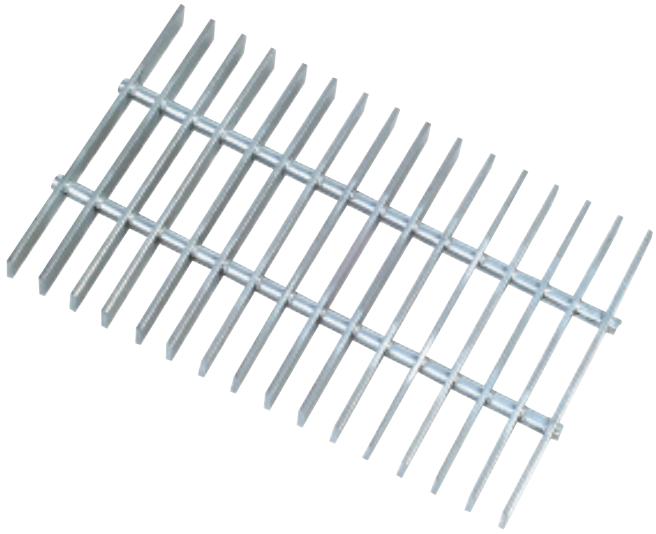

Specifications

SG Model Subway Grating is constructed of 1" x 3/16" Type 304 series stainless steel bar stock, set in vertical position with open top and bottom, through-connected by two (2) ½" Type 304 stainless steel rods, inset 3" from each end, Heli-arc welded to each bar with 13/16" clearance between each bar, up to 15" in width, three (3) are provided on widths over 15", the third one centered.

Gratings are sized up to 20" long sections to allow cleaning in a dishwashing machine.

SGAS Model is machine serrated to provide an anti-slip surface.

SG-ATS Model bars are angled 90° to provide anti-splash.

Product Guide

IMC Floor Trough Gratings are specially designed to provide sanitary carefree use - to permit quick, efficient and thorough cleaning.

Rugged stainless steel construction, engineered to stand up under day-in and day-out abuse.

Floor Trough Gratings can be easily built to specific custom dimensions to fit the operator's special needs and requirements.

Our engineers would be delighted to put their experience and knowledge to work for you in planning the most efficient use of your space.

Options

- ☐ Banding
- ☐ ¼" Radius Corners
- ☐ Extra Polishing
- ☐ 1½" x 1½" x 3½" High S/S Angle Iron Leg w/ Adjustable S/S Bolt Foot & Locking Nut

*See Price List for more options

IMC Teddy •11 Ranick Drive South• Amityville, NY 11701• (800) 221-5644• info@imcteddy.com• www.imcteddy.com

SG
Subway Grating

DRAWINGS

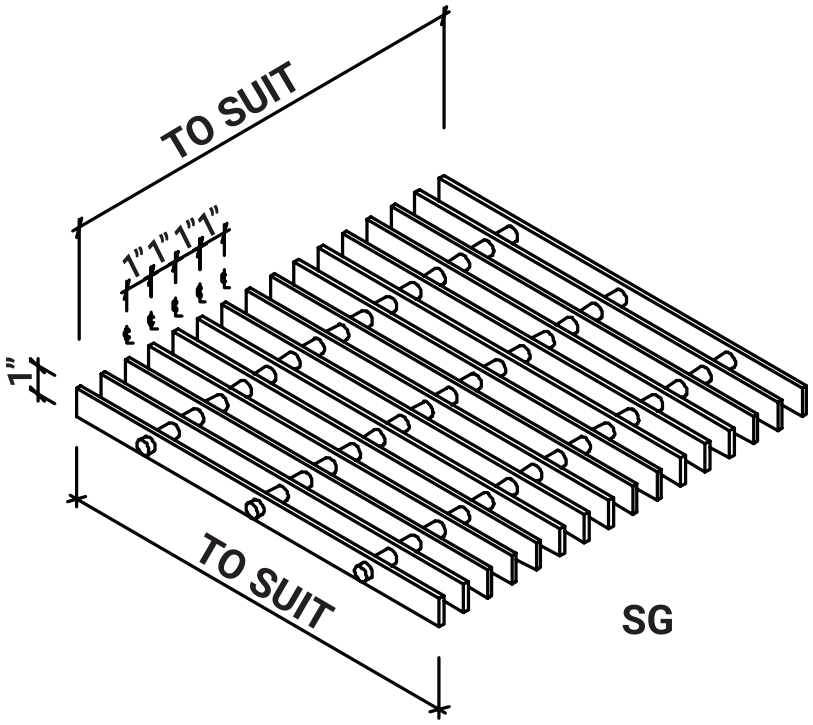

SUBWAY GRATING

Model	Size (W x L)	Model	Size (W x L)	Model	Size (W x L)	Model	Size (W x L)
☐ SG-1224	12" x 24"	☐ SG-1824	18" x 24"	☐ SG-2424	24" x 24"	☐ SG-3024	30" x 24"
☐ SG-1230	12" x 24"	☐ SG-1830	18" x 30"	☐ SG-2430	24" x 30"	☐ SG-3030	30" x 30"
☐ SG-1236	12" x 36"	☐ SG-1836	18" x 36"	☐ SG-2436	24" x 36"	☐ SG-3036	30" x 36"
☐ SG-1248	12" x 48"	☐ SG-1848	18" x 48"	☐ SG-2448	24" x 48"	☐ SG-3048	30" x 48"
☐ SG-1260	12" x 60"	☐ SG-1860	18" x 60"	☐ SG-2460	24" x 60"	☐ SG-3060	30" x 60"
☐ SG-1272	12" x 72"	☐ SG-1872	18" x 72"	☐ SG-2472	24" x 72"	☐ SG-3072	30" x 72"
☐ SG-1284	12" x 84"	☐ SG-1884	18" x 84"	☐ SG-2484	24" x 84"	☐ SG-3084	30" x 84"
☐ SG-1296	12" x 96"	☐ SG-1896	18" x 96"	☐ SG-2496	24" x 96"	☐ SG-3096	30" x 96"
☐ SG-12108	12" x 108"	☐ SG-18108	18" x 108"	☐ SG-24108	24" x 108"	☐ SG-30108	30" x 108"
☐ SG-12120	12" x 120"	☐ SG-18120	18" x 120"	☐ SG-24120	24" x 120"	☐ SG-30120	30" x 120"

Specifications subject to change without notice.

IMC Teddy •11 Ranick Drive South• Amityville, NY 11701• (800) 221-5644• info@imcteddy.com• www.imcteddy.com