IMC/TEDDY
DECADES OF FINE CRAFTSMANSHIP

SMC
Milk Counter

General Information

Project Name: _____

Consultant: _____

Item #: _____

Model #: _____

Quantity: _____



Model SMC-50
Shown w/ optional
Tray Slide

Specifications

Top: 16GA Type 304 stainless steel with 2" channel edge, all corners welded, ground and polished. S/S channel bracing provided as necessary.
Frame: 14GA S/S multi-formed, fully welded vertical corner uprights.
Apron: 18GA S/S, 10" apron welded to framework.
Casters: 5" Heavy Duty ball bearing swivel casters, (2) with brakes.
Interlocking Device: As required, quick release latches are provided to join units together.
Mechanical Refrigeration: Unit is refrigerated to maintain a 38 degree temperature with a self contained system and a cold wall surrounding interior liner. Louvered access panels are for proper ventilation. 5' long cord & plug included.
Cabinet: Fully insulated with 2½" foamed in place polyurethane, includes removable insulated covers with lift type handles. Cabinet has 1" O.D. drain with valve.
Dispenser: Removable self leveling S/S frame and carrier unit.

Product Guide

Modular Milk Counters are convenient and easy to use. These sturdy units are designed for long lasting service.

Units are provided with interlocking devices for quick and easy assembly and disconnecting.

Options

- ☐ Tray Slide (Solid) - 12" Wide
- ☐ Tray Slide (Three Bar) - 12" Wide
- ☐ Display Case (2-Tier)
- ☐ Protector Case
- ☐ Single Service Sneeze Guards
- ☐ Double Service Sneeze Guard
- ☐ Fluorescent Light
- ☐ Work Shelf
- ☐ Work Shelf w/ Poly Top
- ☐ Plate Shelf
- ☐ Full Front Panel (Laminate)
- ☐ Full End Panel (Laminate)
- ☐ Intermediate Undershelf
- ☐ Convenience Outlets - ____ (ea.)
- ☐ 14GA Top Upgrade
- ☐ Backsplash (6" High)
- ☐ Return Splash (6" High R/L)
- ☐ Laminate Doors
- ☐ Kick Base - Stainless Steel
- ☐ Correctional Package
- ☐ Sink - specify size: _____
- ☐ Lever Drain
- ☐ Legs w/ Bullet Feet
- ☐ Doors - Stainless Steel
- ☐ Lever Drain w/ Overflow
- ☐ Receptacle Bracket - ____ (ea.)
- ☐ Drawer(s) - _____ (ea.)
- ☐ Sound Deadended Top
- ☐ Infrared Heat Lamp

*See Price List for more options

SMC-60 0524

SMC
Milk Counter

DRAWINGS

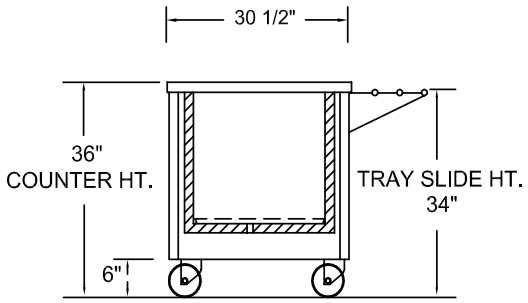

SECTION

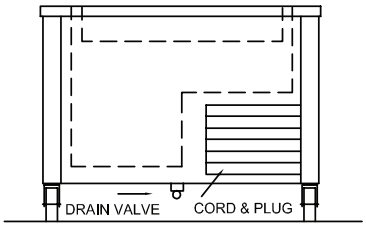

REAR ELEVATION

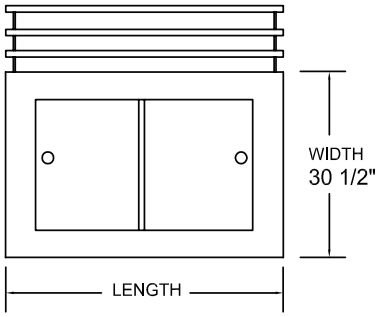

PLAN

MILK COUNTER

Model	Size (W x L x H)	Description	Electrical
☐ SMC-35	30½" x 35" x 36"	2.35 C.F.	1/5 HP, 3.5 amps, 120V, 5-15P
☐ SMC-50	30½" x 50" x 36"	5.30 C.F.	1/5 HP, 3.5 amps, 120V, 5-15P
☐ SMC-77	30½" x 77" x 36"	7.65 C.F.	1/5 HP, 3.5 amps, 120V, 5-15P

RECOMMENDED COUNTER HEIGHT FOR SCHOOLS

- ☐ HIGH SCHOOL - STANDARD HEIGHT: 36" COUNTER HEIGHT - 34" TRAY SLIDE HEIGHT
- ☐ INTERMEDIATE SCHOOL: 34" COUNTER HEIGHT - 32" TRAY SLIDE HEIGHT
- ☐ ELEMENTARY SCHOOL: 32" COUNTER HEIGHT - 30" TRAY SLIDE HEIGHT

Specifications subject to change without notice.

IMC Teddy •11 Ranick Drive South• Amityville, NY 11701• (800) 221-5644• info@imcteddy.com• www.imcteddy.com