STANDARD RANGE

USER MANUAL

ELECTRIC FLOOR FRYER

MODEL: SR-EF50-208; SR-EF50-240

USR BRANDS

USR BRANDS INC.
Phone: 800-764-1172 | www.usrbrands.com | sales@usrbrands.com

USR BRANDS® RESERVES THE RIGHT TO CHANGE SPECIFICATIONS WITHOUT NOTICE

Please read the manual below carefully before operating the machine.

HARDWIRED EQUIPMENT: THIS UNIT MUST BE CONNECTED DIRECTLY TO A DEDICATED ELECTRICAL CIRCUIT BY A LICENSED ELECTRICIAN. DO NOT ATTACH A PLUG, CORD CAP, OR ANY CORD-AND-PLUG CONNECTION DOING SO VOIDS THE WARRANTY AND MAY CREATE A SAFETY HAZARD.

WARNING: IMPROPER INSTALLATION, ADJUSTMENT, ALTERATION, SERVICE OR MAINTENANCE CAN CAUSE PROPERTY DAMAGE, INJURY OR DEATH. READ THE INSTALLATION, OPERATING AND MAINTENANCE INSTRUCTIONS THOROUGHLY BEFORE INSTALLING OR SERVICING THIS EQUIPMENT.

HARDWIRED EQUIPMENT: THIS UNIT MUST BE CONNECTED DIRECTLY TO A DEDICATED ELECTRICAL CIRCUIT BY A LICENSED ELECTRICIAN. DO NOT ATTACH A PLUG, CORD CAP, OR ANY CORD-AND-PLUG CONNECTION DOING SO VOIDS THE WARRANTY AND MAY CREATE A SAFETY HAZARD.

WARNING: IMPROPER INSTALLATION, ADJUSTMENT, ALTERATION, SERVICE OR MAINTENANCE CAN CAUSE PROPERTY DAMAGE, INJURY OR DEATH. READ THE INSTALLATION, OPERATING AND MAINTENANCE INSTRUCTIONS THOROUGHLY BEFORE INSTALLING OR SERVICING THIS EQUIPMENT.

Attention Owners and Operators

Equipment is designed to provide safe and productive processing, cooking and warming of food products as long as the equipment is used in accordance with the instructions in this manual and is properly maintained. Unless the operator is adequately trained and supervised there is a possibility of serious injury. Owners of this equipment bear the responsibility to make certain that this equipment is used properly and safely, and to strictly follow all of the instructions contained in this manual and the requirements of local, state or federal law.

Owners should not permit anyone to touch this equipment unless they are over 18 years old, are adequately trained and supervised, and have read and understood this manual. Repairs and conversions are to be made solely by an authorized servicer. Owners should also ensure that no customers, visitors or other unauthorized personnel come in contact with this equipment. Please remember that vender cannot anticipate every circumstance or environment in which its equipment will be operated. It is the responsibility of the owner and the operator to remain alert to any hazards posed by the function of this equipment. If you are ever uncertain about a particular task or the proper method of operating this equipment, ask your supervisor.

This manual contains a number of precautions to follow to help promote safe use of this equipment. Throughout the manual you will see additional warnings to help alert you to potential hazards.

Warnings affecting your personal safety indicated by:

Warnings affecting your possible damage to the equipment and property are indicated by:

If any warning labels or this manual are misplaced, damaged, or illegible, or if you require additional copies, please contact your nearest representative or supplier directly for these items at no charge.
Please remember that this manual or the warning labels do not replace the need to be alert, to properly train and supervise operators, and to use common sense when using this equipment.

Installation

Step 1: Unpack

IMMEDIATELY INSPECT FOR SHIPPING DAMAGE

All containers should be examined for damage before and during unloading. The freight carrier has assumed responsibility for safe transit and delivery. If damaged equipment is received, either apparent or concealed, a claim must be made with the delivering carrier.

Apparent damage or loss must be noted on the freight bill at the time of delivery. The freight bill must then be signed by the carrier representative (Driver). If the bill is not signed, the carrier may refuse the claim. The carrier can supply the necessary forms.

A request for inspection must be made to the carrier within 15 days if there is concealed damage or loss that is not apparent until after the equipment is uncrated. The carrier should arrange an inspection. Be certain to hold all contents plus all packing material.

1. Uncrate carefully. Report any hidden damage to the freight carrier IMMEDIATELY.
2. Do not remove any tags or labels until unit is installed and working properly.

EXPLODED VIEW AND SPARE PARTS

ELECTRIC FLOOR FRYER SPARE PART LIST

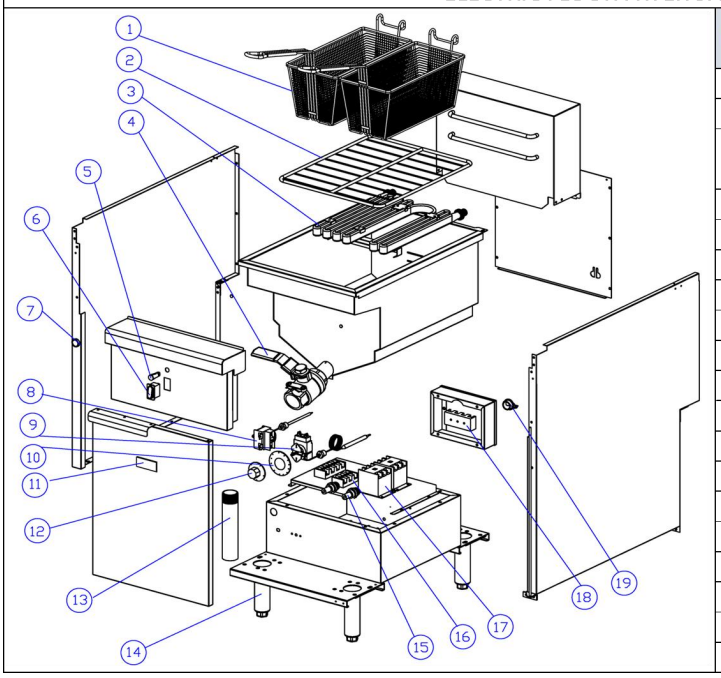

Item	Part	Part Code	Q'ty	
			EF50 208	EF50 240
1	Basket 40/50	20502F006	1	1
2	Screen 50	20502F003	1	1
3	Heater element, 15.26kW, 208V	20207F009	1	
	Heater element, 15.26kW, 240V	20207F008		1
4	Drain out ball valve	21200F002	1	1
5	Heating indicator	20203C002	1	1
6	Power switch	20201K001	1	1
7	Door magent		1	1
8	Hi limiter	20101F052	1	1
9	Thermostat	20101F051	1	1
10	Dial		1	1
11	Nameplate		1	1
12	Thermostat knob		1	1
13	Drain extension	21101F009	1	1
14	Adjustable foot	21001F001	4	4
15	Fuse	20207K012	2	2
16	Terminal block 3 pole	20207C052	2	2
17	AC Contactor	20207K008	2	2
18	Terminal block 4 pole	20207Q051	1	1
19	Cord protect ringe	20207C057	1	1

A product with the named incorporates the best in durability and low maintenance.
We all recognize, however, that replacement parts and occasional professional service may be necessary to extend the useful life of this unit. When service is needed, contact an Authorized Service Agency, or your dealer. To avoid confusion, always refer to the model number, serial number, and type of your unit.

ELECTRICAL DIAGRAMS

NOTE:
1) FOR SUPPLY CONNECTIONS USE COPPER WIRE ONLY.
SUITABLE FOR AT LEAST 105°C(221°F)
USE GAUGE SHOWN OR LARGER
2) ALL INTERNAL WIRING IS #12GA.

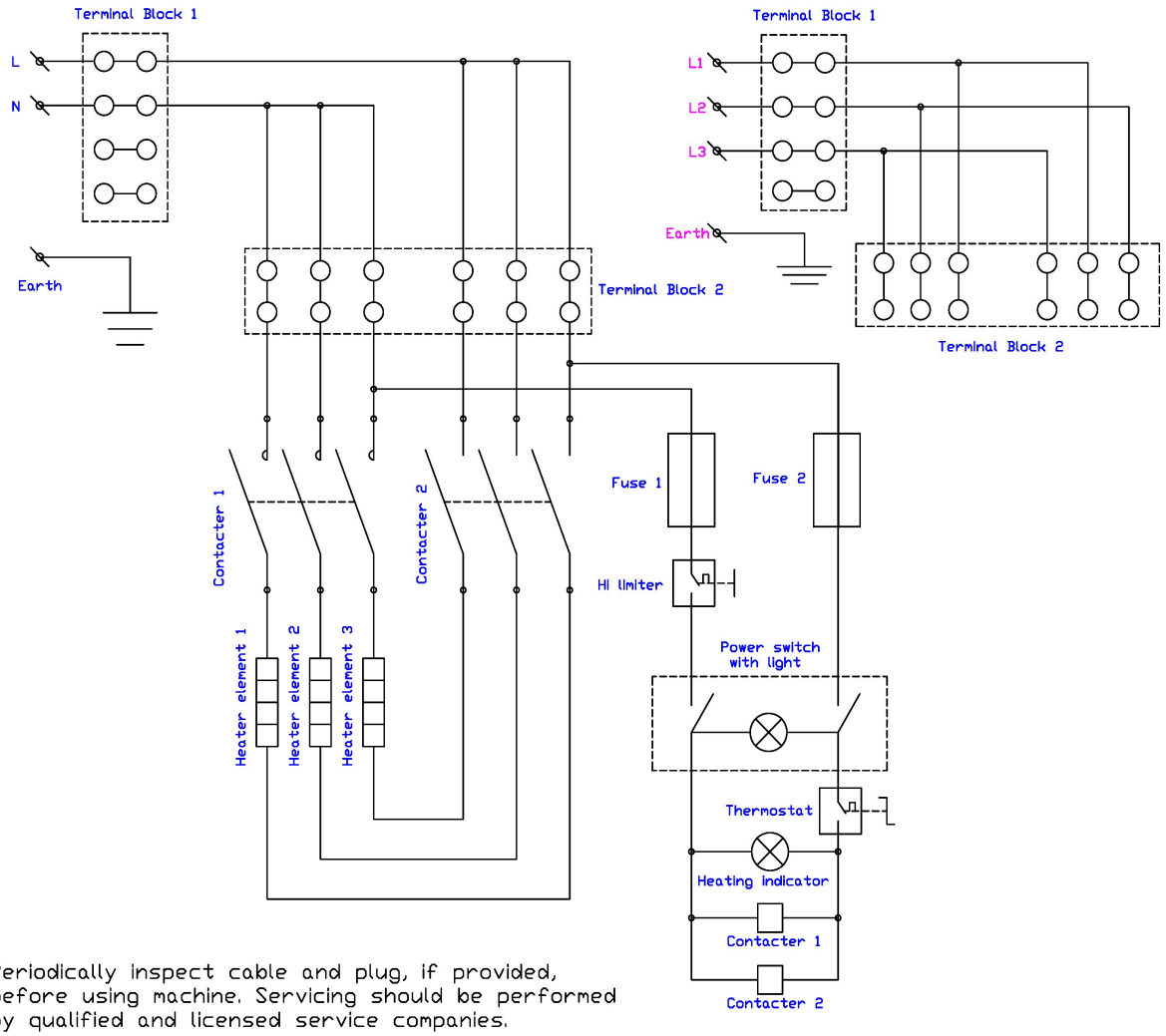

Periodically inspect cable and plug, if provided, before using machine. Servicing should be performed by qualified and licensed service companies.

Step 2: Install the Legs (or Optional Casters) and Restraints

A set of legs is packed with the fryer. Casters are optional, purchased separately. Mounting fasteners are pre-mounted on the base plates.

1. Raise fryer sufficiently to allow legs or casters to be screwed into the base plate. For safety, “shore up” and support the fryer with an adequate blocking arrangement strong enough to support the load.
2. Screw the four legs or casters to the plate on the bottom of the fryer. When casters have been ordered, the casters having a locking-brake should be attached under the front of the fryer.
3. Lower the fryer gently. Never drop or allow the fryer to fall.
4. Use a level to make sure that the fryer is level. Each caster, or the tubular-end of each leg, can be screwed in or out to lower or raise each corner of the fryer.
5. Attach restraints as required by local codes.

6. Raise fryer sufficiently to allow legs or casters to be screwed into the base plate. For safety, “shore up” and support the fryer with an adequate blocking arrangement strong enough to support the load.
7. Screw the four legs or casters to the plate on the bottom of the fryer. When casters have been ordered, the casters having a locking-brake should be attached under the front of the fryer.
8. Lower the fryer gently. Never drop or allow the fryer to fall.
9. Use a level to make sure that the fryer is level. Each caster, or the tubular-end of each leg, can be screwed in or out to lower or raise each corner of the fryer.
10. Attach restraints as required by local codes.

NOTICE

Unit must be level to assure maximum performance. Improper leveling may void warranty.

NOTICE

When this appliance is installed with casters, it must be installed with the casters supplied, a connector complying with either ANSI Z21.69 CSA 6.16 and a quick-disconnect device complying with ANSI Z21.41 CSA 6.9. It must also be installed with restraining means to guard against transmission of strain to the connector, as specified in the appliance manufacturer instructions.

⚠ WARNING

If disconnection of the restraint is necessary to move the appliance for cleaning, etc., reconnect it when the appliance is moved to its original installed position.

⚠ WARNING

When this appliance is installed with casters, it must be installed with the casters supplied, a connector complying with either ANSI Z21.69 or CAN/CGA-6.16 and a quick disconnect device complying with either ANSI Z21.41 or CAN1-6.9. It must also be installed with restraining means to guard against transmission of strain to the connector, as specified in the appliance manufacturer's instructions.

⚠ WARNING

All fryers must be restrained to prevent tipping in order to avoid the splashing of hot liquid. The means of restraint may be the manner of installation.

Step 3: Flue Installation

1. Unpack the flue box and flue wrap

2. Slide the flue box over the flue and secure it with the two self-tapping screws using a 5/16” socket

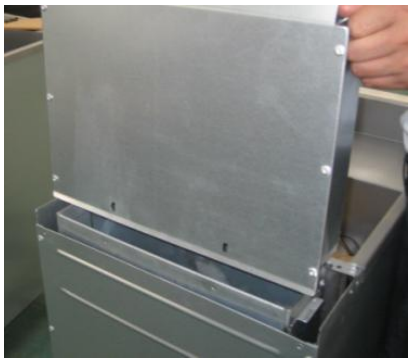
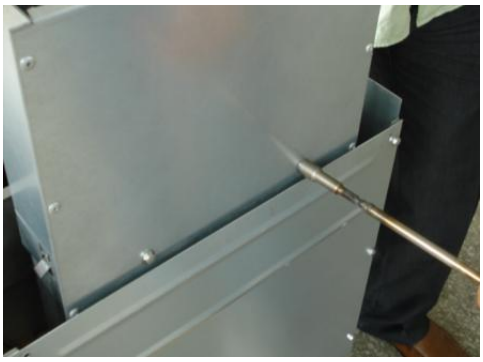

3. Slide the flue wrap over the flue

4. Secure it with four self-tapping screws two on the back and one on each side using a 5/16” socket

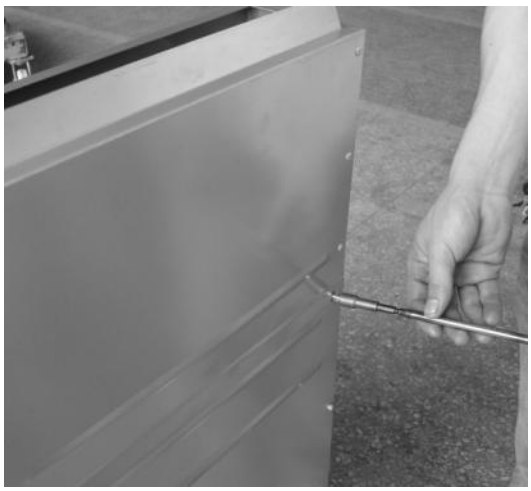

MAINTENANCE AND REPAIR

Contact a service representative or a local service company for service or required maintenance.

ELCTRIC FRYER SURFACE LIMITED WARRANTY EXCLUSIONS

Your electric fryer has been designed to give you many years of cooking reliability and requires minimum maintenance to keep the surface in its original condition. All electric fryer surfaces are warranted for a period of 1 year against manufacturing defects to the original owner from the date of installation. This limited warranty is void if it is determined by one of its authorized representatives that the surface has been misused or abused or subjected to the following situations:

1. Unit was Improperly installed.
2. Incorrect voltage applied to electric units allowing the surface to overheat and discolor.
3. The misuse of any instrument or tool which scratches or makes indentations in the surface which could cause the surface to peel, flake, or chip off.
4. The use of any chemical or abrasive cleaning solution, take out, stone, screen or other cleaning products which could damage and affect the performance of the surface.
5. The neglect of daily routine maintenance to the surface.

THOROUGHLY INSPECT YOUR UNIT ON ARRIVAL

This unit has been tested for before leaving the factory.
Damage may have possibly occurred in shipping. If damage is present, immediately contact the shipping company that delivered the unit and file a claim for shipping damage. If you do not file promptly, the warrantee may not be covered.

5. Close drain valve and strain the oil back into the frypot through several thicknesses of cheesecloth, or filter it back using a filter machine.
6. Replace the basket support frame (if applicable)
7. . Add oil or shortening to MIN oil level mark on rear of frypot.
8. To resume cooking, turn the combination thermostat knob to “ON” position.

Weekly Cleaning

9. Follow steps 1 through 4 of the Daily Cleaning procedure (see previous section).
10. Close drain valve and fill frypot with a solution of warm water and boil-out compound
11. Relight the fryer and bring the solution to a gentle boil for at least five minutes.
12. Turn off thermostat and let the solution stand until the gum deposits are softened and the carbon spots and burned grease spots can be rubbed off.
13. Scrub the frypot walls and heat tubes, then drain out frypot and rinse it with clean water.
14. Refill the frypot with clean water and boil again.
15. Turn off power and drain and rinse well until clean.
16. Wipe dry with a clean cloth.
17. Refill as specified in the “Filling the Frypot” section

Monthly Cleaning

18. Perform the Weekly Cleaning procedure (see previous section).
19. Clean around burner and orifices if lint has accumulated.
20. Visually check that burner carry-over ports are unobstructed.

Cleaning Stainless Steel Surfaces

To remove normal dirt, grease and product residue from stainless steel use ordinary soap and water (with or without detergent) applied with a sponge or cloth. Dry thoroughly with a clean cloth. Never use vinegar or any corrosive cleaner.

To remove grease and food splatter or condensed vapors that have baked on the equipment apply cleanser to a damp cloth or sponge and rub cleanser on the metal in the direction of the polishing lines on the metal. Rubbing cleanser, as gently as possible, in the direction of the polished lines will not mar the finish of the stainless steel. NEVER RUB WITH A CIRCULAR MOTION. Soil and burnt deposits that do not respond to the above procedure can usually be removed by rubbing the surface with SCOTCH-BRITE™ scouring pads or STAINLESS scouring pads. DO NOT USE ORDINARY STEEL WOOL, as any particles left on the surface will rust and further spoil the appearance of the finish. NEVER USE A WIRE BRUSH, STEEL SCOURING PADS (EXCEPT STAINLESS), SCRAPER, FILE OR OTHER STEEL TOOLS. Surfaces that are marred collect dirt more rapidly and become more difficult to clean. Marring also increases the possibility of corrosive attack. Refinishing may then be required.

Step 4: Check Clearances and Ventilation

Select a firm, level location for your fryer. Leave clearance, whenever possible, so that access from the rear is possible to permit cleaning. If the unit is to be set on non-combustible flooring, such as a concrete slab, 3 inches minimum toe room must be provided to prevent restriction of the air opening in the bottom of the unit.

⚠ WARNING

There must be adequate clearance between fryer(s) and construction. Clearance must also be provided in front for servicing and for operation.

Minimum Clearances:

	From Combustible Construction
Sides	6 inches
Rear	6 inches

ALL FLOOR MODEL FRYERS SHALL BE INSTALLED WITH AT LEAST A 16 INCH SPACE BETWEEN THE FRYER AND SURFACE FLAMES FROM ADJACENT EQUIPMENT. A FLAME GUARD IS ACCEPTABLE IF ALLOWED UNDER LOCAL CODE.

No additional side and rear clearance is required for service as the fryer is serviceable from the front.

⚠ WARNING

Improper ventilation can result in personal injury or death. Ventilation that fails to properly remove flue products can cause headaches, drowsiness, nausea, or could result in death.

Unit Must be installed under a ventilation hood

All units must be installed in such a manner that the flow of combustion and ventilation air is not obstructed. Provisions for adequate air supply must also be provided. Do NOT obstruct the bottom front of the unit, as combustion air enters through this area. Be sure to inspect and clean the ventilation system according to the ventilation equipment manufacturer's instructions.

Due to the variety of problems that can be caused by outside weather conditions, venting by canopies or wall fans is preferred over any type of direct venting.

‘
‘
‘

POWER SUPPLER INSTALLATION

Use copper wire ONLY suitable for at least 194° F(90° C)					
MODEL	VOLTAGE	PHASE	WIRE SERVICE	MINI WIRE SIZE AWG	AMPS (per leg)
EF50 15.26kW	208	Single	3	4	73.4
EF50 15.26kW	208	3	3	6	42.4
EF50 15.26kW	240	Single	3	6	63.6
EF50 15.26kW	240	3	3	6	36.7

The electric fryer are designed to operate only for the voltages indicated on the data plate attached to this electric fryer, and for alternating current (AC) only.

WARNING **DO NOT CONNECT TO DIRECT CURRENT (DC).**

The installation of the electric fryer should conform to the:

NATIONAL ELECTRIC CODE AND ALL LOCAL ELECTRIC CODES AND ORDINANCES AND THE LOCAL ELECTRIC COMPANY RULES AND REGULATIONS.

A Qualified electrical installer must install this electric hotplate. Improper installation will void the manufacturers warrantee. External wiring should be in conduit or an approved type of flexible cable suitable for operation at the temperature indicated on the wiring diagram, and of a proper size to carry the load. The supply circuit should be properly fused and equipped with a means of disconnecting, as required by local electrical code.
THE BODY OF THE ELECTRIC FRYER SHOULD BE GROUNDED (DO NOT GROUND TO A ELECTRIC SUPPLY LINE).

NOTE: Appliances are not internally fused. **They must be connected to a suitable disconnect box in accordance with local code.**

Electric fryers may be wired for operation in the field for either 1-phase or 3-phase power supplies by making line connections at the junction box(es) located at the rear of the unit.

CONNECTING POWER SUPPLY

Open cover on junction box at rear of unit. Pigtail leads must be connected to supply power as per the diagrams in this manual.

LOCATING AND LEVELING THE UNIT

Do not install the unit closer than 1-inch from a side wall and/or closer than 1-inch from a rear wall. Level unit by adjusting the (4) feet which have an adjustment of 1-3/4” (43.75mm) for accurate leveling and perfect line-up with other series units.

EXHAUST CANOPY

A vertical distance of not less than 48” shall be provided between the top of the appliance and filters or any other combustible material. Exhaust installation must conform to local codes.

OPERATION

1. Fill the frypot with vegetable oil to the bottom OIL LEVEL line located on the rear of the frypot. This will allow for oil expansion as heat is applied. Do not fill cold oil any higher than the bottom line; overflow may occur as heat expands the oil. If solid shortening is used, carefully pack solid shortening into the bottom of the frypot, below, between and around the elements. Use extreme care not to damage the elements or sensing bulbs when packing the
shortening into the frypot. Ensure the elements are completely covered with shortening prior to engaging power switch. Never insert a solid block of shortening into frypot on top of the elements. Hot spots and element damage will occur, and the potential for flash-fire increases.
2. Ensure that the power cord is plugged into the appropriate receptacle. Verify that the face of the plug is flush with
the outlet plate, with no portion of the prongs visible.
3. Set the thermostat dial to the desired temperature. Turn the fryer power switch on and allow the oil to come to operating temperature. If the fryer temperature exceeds 464°F (240°C) the over-temperature
protection circuit will trip. Allow the fryer to remain off for 30 minutes before resetting the high-limit switch. Contact a service agent if the problem persists.
4. Ensure that the oil/shortening level is at the top OIL LEVEL line when the fryer reaches operating temperature (the
indicator light will cycle on and off). It may be necessary to add oil or shortening to bring the level up to the proper mark. If solid shortening is used, it may be necessary to turn the power switch off, and then back on, as the shortening melts, to prevent hot spots.

Shutdown

1. Press the ON/OFF switch to the "OFF" position.
2. Filter oil or shortening and clean the fryer.
3. Place the frypot covers on frypots.

DAILY SHUT-DOWN

At the end of the day turn the thermostat to "OFF" position and the power switch to "OFF" position. Filter the oil in all fryers.

CLEANING CARE

- **DO NOT** use any abrasive or flammable cleaning fluids.
- **DO NOT** hose down, immerse or pressure wash any part of the Electric fryer, excluding the catch tray.
- **NEVER** use a scrubber pad (on all exterior surfaces, except the electric fryer plate), steel wool or abrasive material, or cleaners containing chlorine, iodine and ammonia or bromine chemicals as these will deteriorate the stainless steel and shorten the life of the unit.

Daily Cleaning

1. Turn thermostat knob to “OFF” position.
2. Place hot-oil in a safe container under the drain and drain the frypot completely.
3. Remove the basket support frame (if applicable) and flush out any sediment remaining in the frypot with a little hot oil.
4. Wipe off the basket support frame and the inside of the frypot with a clean cloth.

CAUTION

SOME AREAS OF THE FRYPOT MAY BE HOT!