IMC/TEDDY
DECADES OF FINE CRAFTSMANSHIP

TC1
Enclosed Tray Carts

General Information

Project Name: _____

Consultant: _____

Item #: _____

Model #: _____

Quantity: _____



TC1-12
Shown with
Optional Corner
Bumpers

Specifications

TC1 Model Enclosed Cart is constructed of 18GA Type 304 all welded transmitted body with 18GA double walled insulated doors. Heavy duty channel chassis is designed to absorb impact through 6" casters and bumper frame. Doors are insulated and mounted on stainless steel hinges for 270 degrees swing back. Positive latch is mounted at each door.

Removable tray slides hold 15" x 20" and 14" x 18" trays (not furnished) from 12 to 20 total.

Carts are provided with top (44½" - 50" height models) or push handles (53½" - 64½" height models) and finished brush satin with covered edges.

Product Guide

Fully enclosed carts are designed for heavy-duty institutional use in tray delivery systems.

Doors swing back 270 degrees and held in open position by positive latch for service and cart washing. Magnetic catch closes the door securely.

Ease of cleaning is further improved with removable tray slides, pitched bottom and removable doors.

Options

- **CS-8** - 8" Casters (In Lieu of 6" Casters)
- **C-103** - Additional Casters (Set)
- **DRL** - Door Lock
- **DRS-107** - Doors on Back to Make Cart Pass Thru (Each)
- **HDL-106** - Extra Handles (Each)
- **GR-101** - Galley Rail
- **INSD** - Insulated Doors (Each)
- **WAB** - Wrap Around Bumpers

*See Price List for more options

IMC Teddy •11 Ranick Drive South• Amityville, NY 11701• (800) 221-5644• info@imcteddy.com• www.imcteddy.com

IMC/TEDDY
DECADES OF FINE CRAFTSMANSHIP

TC1
Enclosed Tray Carts

DRAWINGS

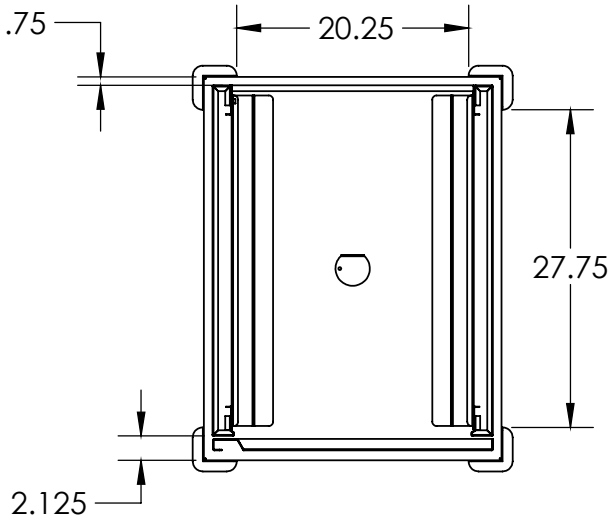

Plan

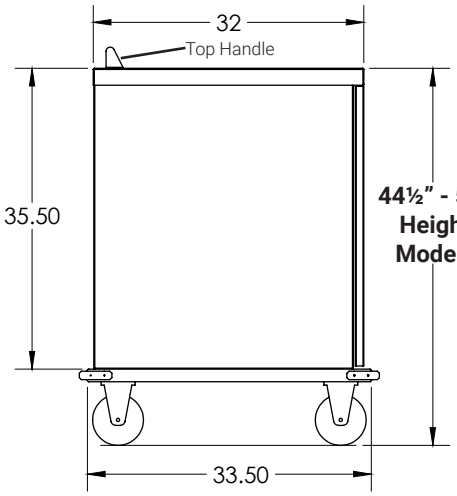

Front View

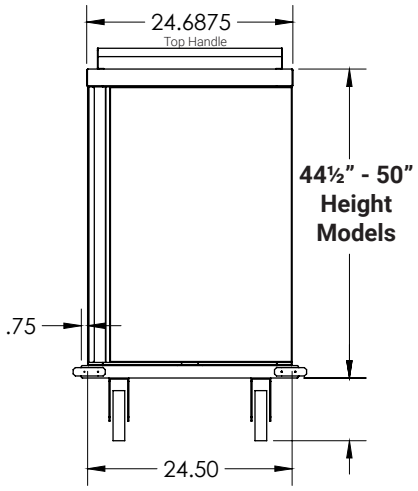

Side View

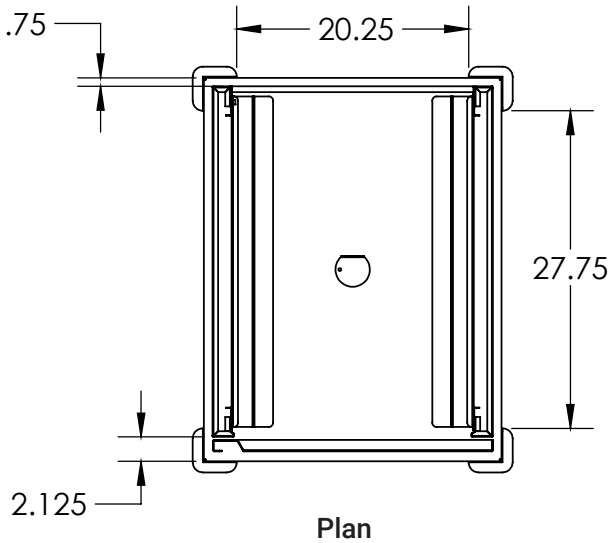

Plan

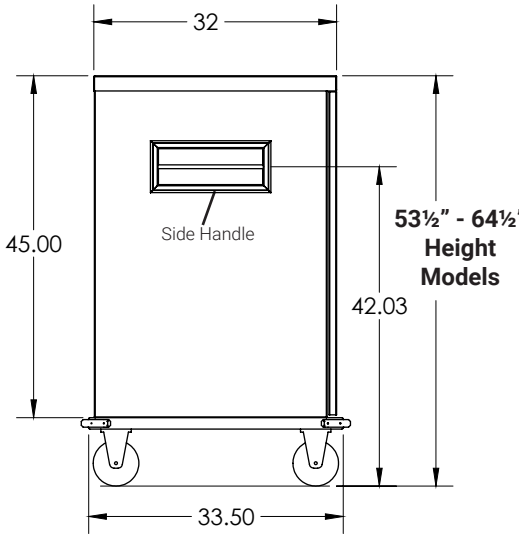

Front View

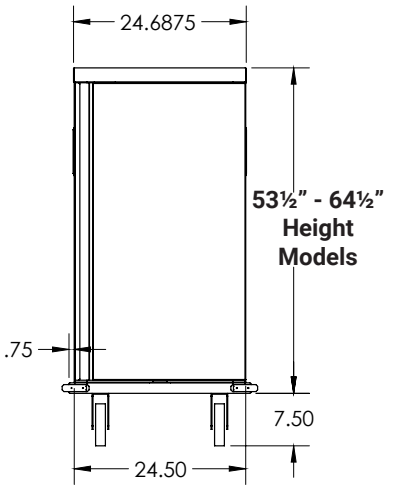

Side View

TRAY CART ENCLOSED CARTS

Model	Trays	Size (W x L x H)	Handle Type
☐ TC1-12	12	32" x 24½" x 44½"	Top
☐ TC1-14	14	32" x 24½" x 50"	Top
☐ TC1-16	16	32" x 24½" x 53½"	Push
☐ TC1-18	18	32" x 24½" x 59"	Push
☐ TC1-20	20	32" x 24½" x 64½"	Push

Specifications subject to change without notice.

TC1-80 1024