IMC/TEDDY
DECADES OF FINE CRAFTSMANSHIP

TD-R
Wall Mounted Roll Towel Dispenser

General Information

Project Name: _____

Consultant: _____

Item #: _____

Model #: _____

Quantity: _____



Specifications

TD-R Model Surface Mounted Towel Dispenser holds & dispenses one 8" or 9" (203 or 229) wide up to 800 ft (244m) long standard towel roll up to 8 5/8" diameter [Ø219] & one stub roll up to 4" diameter (Ø102).

Unit frame & cabinet is constructed of 22GA stainless steel type 304 alloy 18-8. The door is 18GA. All exposed surfaces are #4 satin finish.

Automatic transfer mechanism dispenses towels from stub roll before starting new roll. The lever operates unit & adjusts to dispense 2 1/2", 4", or 5" (64, 102, & 127) preset length of towel.

The door attaches to the cabinet at the side with a full length 3/16" diameter (Ø5) multi-staked stainless steel piano hinge & closes with a tumbler lock key.

Product Guide

Towels are fed by lever action until supply is depleted. Towel feed length is adjustable for economy by pin (supplied) limiting of lever stroke length by owner.

Unit may be reloaded with a full roll to automatically start when finished with an existing partial roll.

Locking door prevents unauthorized access or removal.

Options

- ☐ Security/Correctional design
- ☐ Stand-alone wall mounting

*See Price List for more options

TD-R 20 0524

TD-R
Wall Mounted Roll Towel Dispenser

DRAWINGS

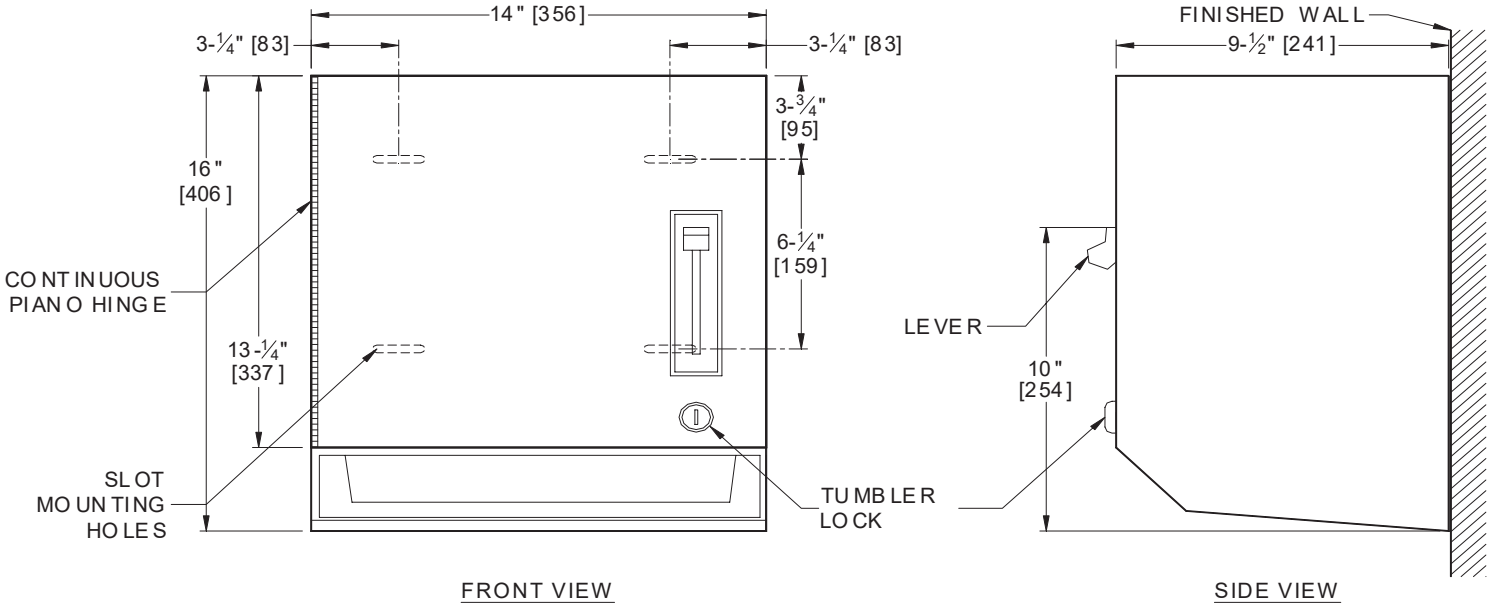

FRONT VIEW

SIDE VIEW

Specifications subject to change without notice.

TD-R 20 0524