unity **Datasheet**

Project:	Quantity:
Model #:	Approval:

For Commercial Use Only

U-CF1 18" Black Glass Swing Door Countertop Display Freezer - 1.8 cu ft.



FEATURES

- Black coated steel exterior
- Temperatures between -10 - 5 degrees F
- Triple pane swing glass door
- 3 adjustable heavy-duty shelves
- LED interior lighting
- Digital control system
- Eco-friendly R290 refrigerant
- Leveling feet
- 110v plug and play
- Top lit header
- Self-closing glass door

This Unity compact freezer glass display makes a great addition to any bars, bakery, deli, or coffee shop looking for a reasonably priced. The internal LED lighting helps display frozen foods to your customers.

- cETLus Listed
- ETL Sanitation Listed

Conforms to UL & NSF Standards

⚠ This unit requires a dedicated 15 Amp Circuit installed by a licensed electrician.

USR Brands is a US supplier of premium quality commercial cooking, refrigeration and food preparation equipment. Our aim is simple. Produce industry-leading commercial restaurant equipment at reasonable prices, and back it all up with an easy to understand, no nonsense warranty that people can count on.

USR BRANDS® RESERVES THE RIGHT TO CHANGE SPECIFICATIONS WITHOUT NOTICE

unity Datasheet

Project:	Quantity:
Model #:	Approval:

For Commercial Use Only

TECHNICAL DATA

DIMENSIONS

Exterior Dimensions	18.11"L x 19.45”D x 33.6”H
Interior Dimensions	12.6"L x 12.2”D x 19.7”H
Packaging Dimensions	22"L x 21.2”D x 36”H
Net Volume	1.8 cu. ft.
Unit Weight	77 lb.
Shipping Weight	86 lb.

ELECTRICAL

Voltage	110
Hertz	60
Phase	1
Amps	2.5
Watts	120W
Plug Type	NEMA 5-15P
Power Cord Length	74”

COOLING

Temperature Range	-10°F to 5°F
Refrigerant	R290
Temperature Controller	Digital

CONSTRUCTION

Exterior Material	Painted Sheet
Exterior Color	Black
Interior Material	Aluminium
Insulation Material	Foamed-in-Place Polyurethane
Door Style	Swing
Door Type	Glass
Shelf Quantity	3 (12.4" x 11")
Shelf Material	Coated Steel
Adjustable Shelf	Yes
Interior Light	L.E.D
Adjustable Feet	Yes

TECHNICAL DRAWING

MODEL: U-CF1

MFR ITEM: SD50B



NEMA 5-15P

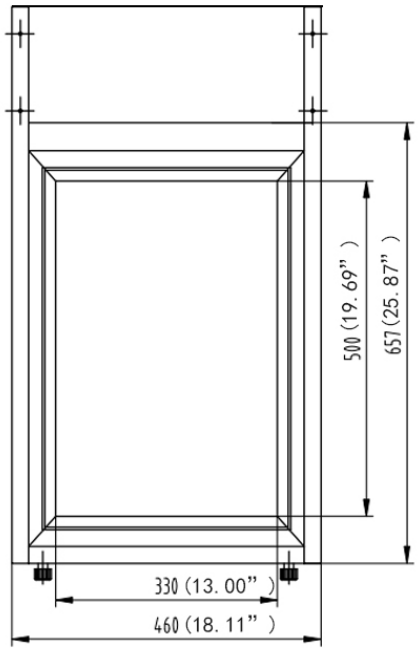

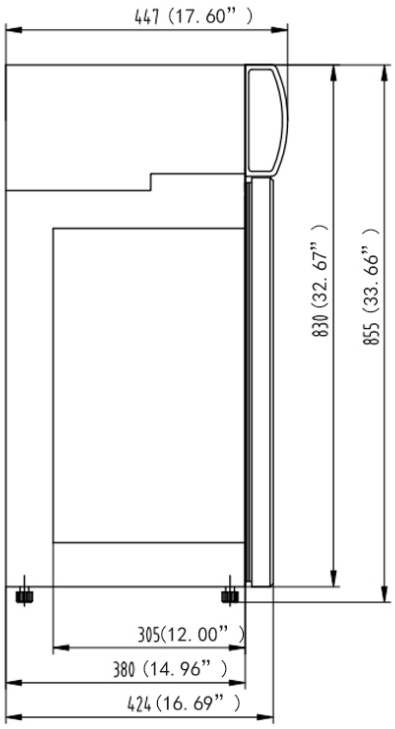

USR BRANDS® RESERVES THE RIGHT TO CHANGE SPECIFICATIONS WITHOUT NOTICE