IMC/TEDDY
DECADES OF FINE CRAFTSMANSHIP

USH
Utility Shelf

General Information

Project Name: _____

Consultant: _____

Item #: _____

Model #: _____

Quantity: _____



PROUDLY MADE IN THE USA

Specifications

USH Model Utility Shelf is constructed of 18GA Type 304 stainless steel with 2" straight backsplash that protects the wall.

Overall size is 8" x 24" or 8" x 36". Custom sizes are also available.

Shelf has 2 mop holders & 3 hooks for rags. Sizes longer than 36" have extra mop holders and/or hooks depending on length. Unit features (2) support brackets on the ends.

Mount on wall with bolts through lip on support flanges.

Product Guide

Utility shelf is placed on wall above any IMC mop sink creating a mop & cleaning area.

Options

- ☐ **GA-16** - 16GA Upgrade
- ☐ Slotted Shelf
- ☐ 2" Side Splashes
- ☐ Custom Shapes & Sizes Available

*See Price List for more options

UTILITY SHELVES

Model	Size (W x L)
☐ USH24	8" x 24"
☐ USH36	8" x 36"

IMC Teddy •11 Ranick Drive South• Amityville, NY 11701• (800) 221-5644• info@imcteddy.com• www.imcteddy.com

DRAWINGS

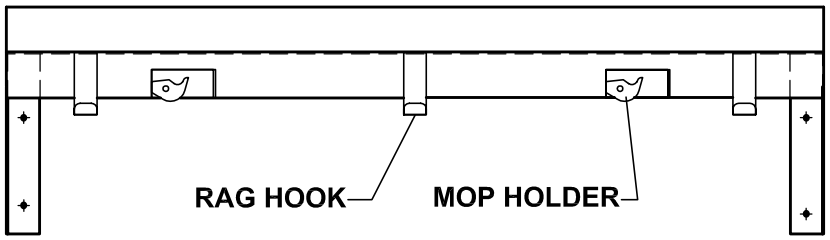

FRONT ELEVATION

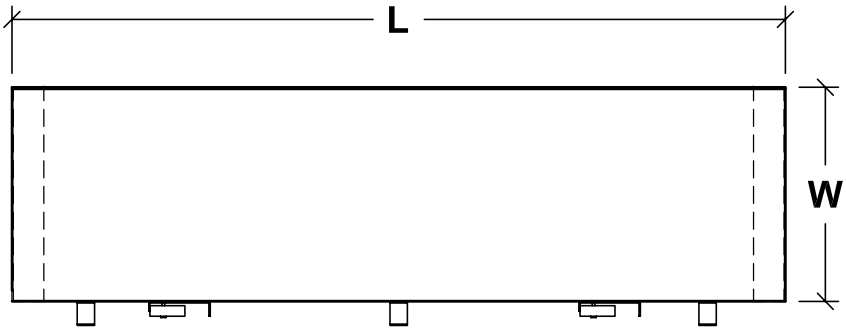

PLAN

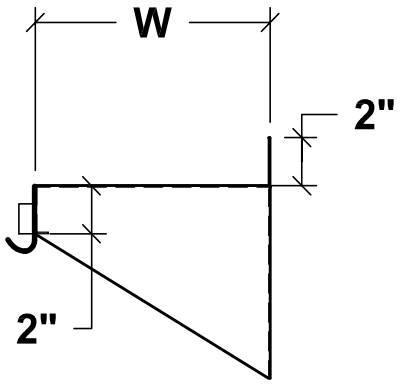

SIDE ELEVATION

Specifications subject to change without notice.

IMC Teddy •11 Ranick Drive South• Amityville, NY 11701• (800) 221-5644• info@imcteddy.com• www.imcteddy.com